Per informazioni:
www.updinamic.com
E-mail: info@updinamic.com
Tel. + 39.0442.590.129
Fax +39.0442.599.091
Via Franco Modigliani, 22
37045 - Legnago (VR) Italy

UPDINAMIC S.r.l.

Via Modigliani, 22

37045 - LEGNAGO(VR)

ELECTRICAL MANUAL

CAR LIFT AND GOODS LIFT

MODEL DL2 Smart

Rev. 01.00 - 07/04/2021

(machine for transporting goods/cars only

or goods/cars with an operator)

SERIAL NUMBER

THIS MANUAL ADDRESSES THE MACHINE INSTALLER AND MAINTENANCE TECHNICIAN. THE OWNER MUST KEEP THIS MANUAL AND THE RELATIVE ATTACHMENTS IN THE UTILITY SHAFT.

☒ MACHINE MANUAL

☒ USER MANUAL

☒ MAINTENANCE MANUAL

☒ INSTALLATION MANUAL

Per informazioni:
www.updinamic.com
E-mail: info@updinamic.com
Tel. + 39.0442.590.129
Fax +39.0442.599.091
Via Franco Modigliani, 22
37045 - Legnago (VR) Italy

PREMISES AND DEFINITIONS

In the present document the following codes and conventions will be used:

ATTENZIONE !!

TAKE SPECIAL CARE TO WHAT IS INDICATED AS NON-OBSERVANCE MIGHT GENERATE DAMAGE TO PERSONS AND/OR TO THINGS

VIETATO PROSEGUIRE SE NON EFFETTUATO QUANTO RICHIESTO

THE ELECTRIC DIAGRAMS HIGHLIGHT THE OBJECTS INSIDE THE PANEL EITHER “IN THE FIELD” OR “ON BOARD THE MACHINE”, AS FOLLOWS:

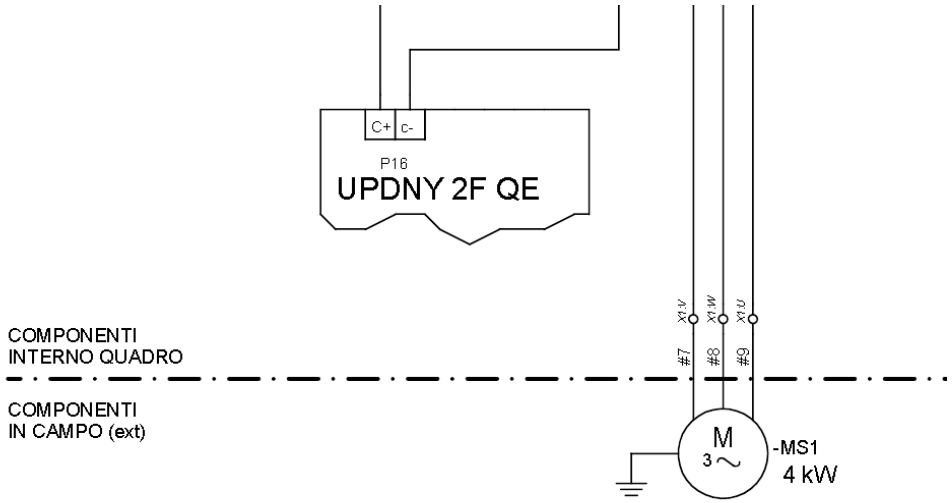

Per informazioni:
www.updinamic.com
E-mail: info@updinamic.com
Tel. + 39.0442.590.129
Fax +39.0442.599.091
Via Franco Modigliani, 22
37045 - Legnago (VR) Italy

OPERATIONS PRIOR TO THE PUTTING INTO SERVICE OF THE ELECTRIC PANEL

Before proceeding to powering the electric panel check that:

- A safety switch for protection against short circuits and losses to earth (magnetothermal or differential is installed and which is adequate for the load generated by the electric panel
- Check that the yellow/green earthing conductor is connected to an efficient dispersion system
- Carry out a visual check on the status of the conductors and check the integrity of the cable insulation

IT IS STRICTLY PROHIBITED TO PUT THE MACHINE INTO SERVICE OR PROCEED WITH START-UP OPERATIONS WITHOUT HAVING CARRIED OUT THE ABOVE-DESCRIBED OPERATIONS.
UPDINAMIC DOES NOT RESPOND IN ANY WAY FOR EVENTUAL DAMAGE OR PERSONS OR THINGS DUE TO NON-OBSERVANCE OF WHAT IS SET OUT IN THE FOREGOING

ATTENZIONE !!

- Zero (off) QG (General) QA (220v protection) and QF1 (hydraulic control unit protection)

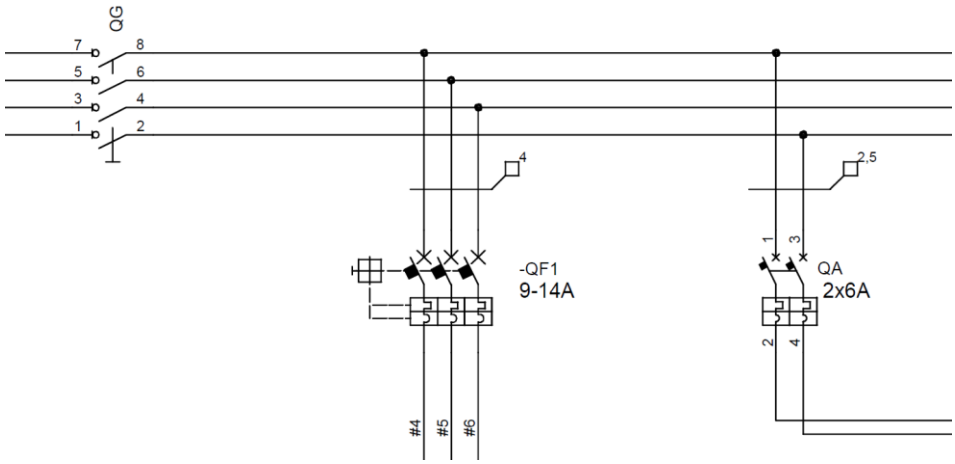

Figure 1

Per informazioni:
www.updinamic.com
E-mail: info@updinamic.com
Tel. + 39.0442.590.129
Fax +39.0442.599.091
Via Franco Modigliani, 22
37045 - Legnago (VR) Italy

- Check the state of the electric panel casing to make sure it is intact and has not suffered damage during transport and/or installation
- Check the state of the mechanical, electronic and electric lock limit switches which have not suffered damage during transport and/or installation
- Check that all connection cables to the various external components such as pushbutton panels, locks, flashing lights, motorised accesses etc. are intact, of a suitable quality and suitable for the loads to be connected

ATTENZIONE !!

Carry out a check on the correspondence between the main rating data of the machine and what actually is present on-site: see the data on the cover of the electrical diagrams

Example plate data:

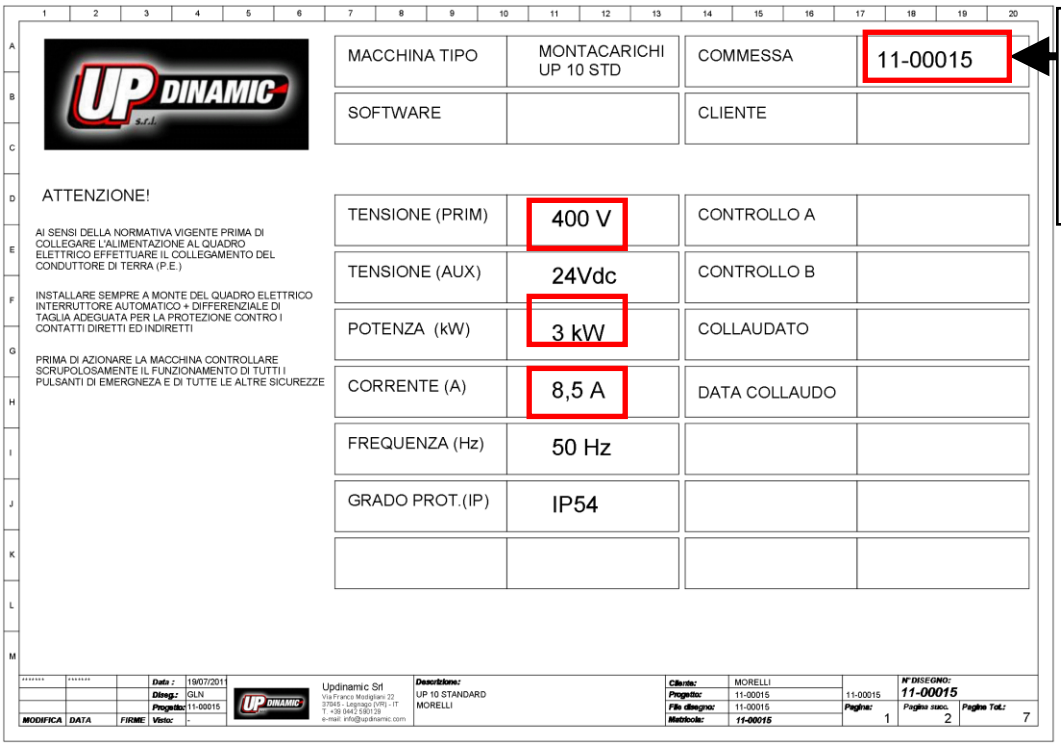

SYSTEM CODE THAT MUST ALWAYS BE CITED IN COMMUNICATIONS WITH UPDINAMIC

Per informazioni:
www.updinamic.com
E-mail: info@updinamic.com
Tel. + 39.0442.590.129
Fax +39.0442.599.091
Via Franco Modigliani, 22
37045 - Legnago (VR) Italy

ELECTRICAL CONNECTIONS

Having fully respected the content of the preceding chapters, it is now possible to carry out the electrical connections to the machine in the following sequence:

1. Connection of the electric power supply cable
2. Connection of the pushbutton panel cables to terminals P14 and P9 (respect the floors)
3. Connection of the high floor limit switch lock to terminal P12
4. Connection of the high floor limit switch lock to terminal P13
5. Cable connection from the platform to terminal P8
6. Connection of any electric locks to terminals P10 and P11 (respect the floors)
7. If the machine has been demounted connected the solenoids

Detail of power supply cable connection

Connect the power supply directly to the switch

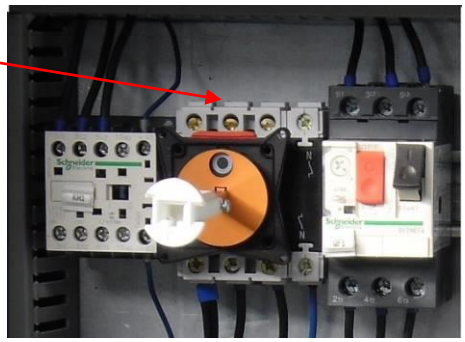

Having carried out the above-indicated procedures, the electric panel can be powered up by acting on the main safety switch (QG): before activating it use a multimeter check for correct power voltage and that the live and/or neutral conductors are properly connected.
At this point start up QA which will supply the various services and leave QF1 off for now, for safety reasons: the whole machine system is at 24Vdc and this voltage is generated by the AL switching supply; once the services are powered this supply will be immediately activated and correct functioning can be checked using the green warning light located on the front panel of the power supply.
(note: as it is a switching type power supply it is not damage if there is a short circuit but transfers to protection mode to reduce the output voltage to below 16V; therefore particular attention should be paid to this detail as due to a cabling error it might occur that no device is active as the power supply is in protection mode: in particular pay close attention to the maximum load generated by any electric locks as some models available on the market have absorption that can be very high and thus lead to the same situation as a short circuit.
If everything is correctly connected the PLC warning lights are lit and the various signalling lights confirming that everything is correctly connected are also lit.
When this first step is completed it is recommended to keep at least one emergency mushroom head button pressed with the purpose of preventing involuntary activations of the machine during the putting into service.
Now proceed to checking the rotation direction of the motor, which must coincide with the direction indicated by the arrow on the motor cover: for this purpose insert the QF1 thermal and manually activate for an instant the KM counter and check the effective rotation direction of the motor.

Per informazioni:
www.updinamic.com
E-mail: info@updinamic.com
Tel. + 39.0442.590.129
Fax +39.0442.599.091
Via Franco Modigliani, 22
37045 - Legnago (VR) Italy

MACHINE ACCESSORIES

The standard machine is composed of the following parts supplied in the kit for the electrical part: the electric locks can be different in different deliveries and therefore refer to the optionals ordered

Details of auxiliary terminals

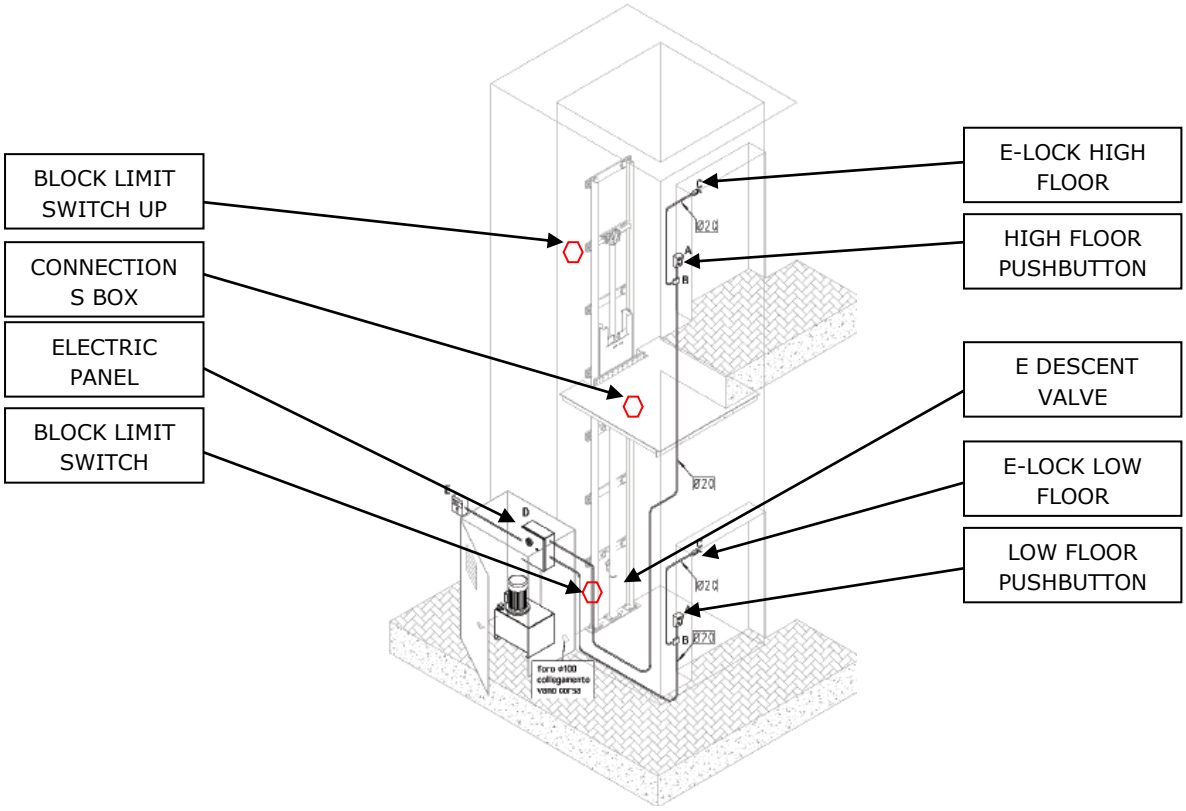

Per informazioni:
www.updinamic.com
E-mail: info@updinamic.com
Tel. + 39.0442.590.129
Fax +39.0442.599.091
Via Franco Modigliani, 22
37045 - Legnago (VR) Italy

ELECTRICAL PART:

All components of the system will be connected to the electric panel via the section cables supplied and having variable length according to the system (height, platform etc.).

The objects to be connected are essentially:

- External pushbutton panels
- Connection box to the mobile part
- Electric locks for floor doors
- Descent solenoid (installed at the base of the hydraulic cylinder)
- Limit switch unit (one for each stop included)
- Any other safety device/options for single special systems

Normally the hydraulic control unit motor is connected in the factory: where necessary it can be distanced from the electric panel taking care to use a section cable having a section and quality related to the power of the actual motor

The same applies to all other users connected to the electric panel with special attention to any electric locks which might have significant consumption of electricity and connect them using cables having section that is too small for them to function correctly.

Per informazioni:
www.updinamic.com
E-mail: info@updinamic.com
Tel. + 39.0442.590.129
Fax +39.0442.599.091
Via Franco Modigliani, 22
37045 - Legnago (VR) Italy

UP 2 STOPS SPB / NO SPB - LEGEND LED ORANGE LIGHT INPUTS

S4	Reserve (not used)
21-22	Doors closed series
P2	External button up
P1	External button down
ST	Emergency Stop series
FC	Proximity switch sensor (or limit switch) Hooks reading
ST1	Stop limit switch floor P1
RL1	Deceleration Limit Switch Piano P1
ST2	Stop limit switch floor P2
RL2	Deceleration Limit Switch Floor P2
CH	Slackening chains limit switch (only SPB)
TM	Auxiliary safety device contact
S3	Reserve (not used)
XC	On board key button (only SPB)
X2	Internal ascent button (only SPB)
X1	Internal descent button (only SPB)
PH	Photocells on board (only SPB)

Per informazioni:
www.updinamic.com
E-mail: info@updinamic.com
Tel. + 39.0442.590.129
Fax +39.0442.599.091
Via Franco Modigliani, 22
37045 - Legnago (VR) Italy

UP 2 STOPS SPB / NO SPB - LEGEND LED GREEN LIGHT OUTPUTS

CI	Motor power supply (Ascent)
SL	Solenoid ascent
DS	Solenoid descent
RL	Solenoid Deceleration
R3	Reserve (not used)
MM	Hooks electromagnets power supply
ES	Electric locks power supply (machine at floor)
D2	Lamp on floor P2
D1	Lamp on floor P1
LL	On-board courtesy light

MANAGEMENT OF THE UPDYN PLC 2F CARD (only for UP for 2 stops)

During installation a parameter adjustment can be carried out so as to adjust a delay in floor limit switch reading with the aim of provided a safe rest to the platform and enabling a slight slackening of the chains: doing this will give the certainty that the entire weight of the platform with the machine empty will not bear on the chains. The electronic card enables managing further parameters.

Per informazioni:
www.updinamic.com
E-mail: info@updinamic.com
Tel. + 39.0442.590.129
Fax +39.0442.599.091
Via Franco Modigliani, 22
37045 - Legnago (VR) Italy

CONFIGURATION OF CARD PARAMETERS

Enter the programming menu:

1 Press and keep pressed SW1
2 Press and release SW4
3 Release SW1

Menu navigation:

SW1 = Ok confirm / enter the page / save the setting
SW2 = Next page
SW3 = Previous page
SW4 = Exit from the menu

Menu pages

0	Setting card

Start page of the menu

1	Switch Delay

Enter this page to change the delay set on the floor limit switches (from factory 2 sec setting)
The delay on the floor limit switches is so that the loading platform correctly hooks to the floor and the chains slightly slacken.

2	Occupied time

Enter this page to change the occupied time; this is the time during which the external pushbutton panels remain disabled following the closure of the floor door (factory setting 4 secs), to enable the on-board operator to reach the internal commands safely.

3	Stand-By Lock

This is a time settable from 0 seconds to 180 minutes, or infinite, and determines the standby time of the floor locks (factory setting 10 min); after this time the locks are de-energised and thus keep the door open. To activate the locks simply press the floor button.

4	Inner Light

This setting determines the turn-off time of the on-board lamp with the platform at the floor and the doors closed (factory setting 15 sec)

Per informazioni:
www.updinamic.com
E-mail: info@updinamic.com
Tel. + 39.0442.590.129
Fax +39.0442.599.091
Via Franco Modigliani, 22
37045 - Legnago (VR) Italy

5	Time Motor Off

Time run by system (factory setting 240 sec) determines the motor and valve off time following a system call command; should the lift not arrive at the floor due to a fault (e.g. lack of oil, load too large beyond the rated capacity on the platform)

6	Time/Calendar

Possibility of setting Date and Time, so that the alarms log is memorised with this information

7	Error Message

List of error messages in chronological order

8	Clear Err. Mem

Function enabling cancellation of the error message memory.

Lock code management:

1 Press and keep pressed SW2
2 Press and release SW4
3 Release SW2

This pages includes the identifying code of the ID PLC card which can be seen by pressing SW1, or enter the release code press SW3 (enter code).

How to carry out the locking of the card:

1 Press and keep pressed SW1 and SW3 at the same time
2 Press and release SW4
3 Release SW1 AND SW3
4 Press SW4 to lock
(WARNING, THE PLANT WILL REMAIN LOCKED AND THE UNLOCKING CODE WILL BE NEEDED TO REACTIVATE IT!)

To obtain the release code send Updinamic at address ut@updinamic.com, the identifying code of the ID PLC code.

Per informazioni:
www.updinamic.com
E-mail: info@updinamic.com
Tel. + 39.0442.590.129
Fax +39.0442.599.091
Via Franco Modigliani, 22
37045 - Legnago (VR) Italy

MANAGEMENT OF THE SINGLE MENU PAGES

(AFTER ENTERING THE PAGE)

1	SWITCH DELAY

Select:

SW2 = to set the delay on floor P1 limit switch

SW3 = to set the delay on floor P2 limit switch

Then adjust the delay (2.00 seconds ex factory)

SW2 = decreases the value

SW3 = decreases the value

SW1 = press to memorise

Then press SW4 (reset) to cancel the old values from the memory

2	OCCUPIED TIME

Adjust the delay (4.00 seconds ex factory)

SW2 = decreases the value

SW3 = decreases the value

SW1 = press to memorise

Then press SW4 (reset) to cancel the old values from the memory

A VALUE OF 0 SEC CANNOT BE SET for systems having an on-board SPB operator system

Per informazioni:
www.updinamic.com
E-mail: info@updinamic.com
Tel. + 39.0442.590.129
Fax +39.0442.599.091
Via Franco Modigliani, 22
37045 - Legnago (VR) Italy

3 STAND-BY LOCK

Adjust the delay (10 seconds ex factory)

SW2 = decreases the value

SW3 = decreases the value

SW1 = press to memorise

Then press SW4 (reset) to cancel the old values from the memory

NB: if the electric locks allow it, we recommend setting the value to Always, so that the locks are always locked when the platform is at the floor.

4 INNER LIGHT

Adjust the delay (15 seconds ex factory)

SW2 = decreases the value

SW3 = decreases the value

SW1 = press to memorise

Then press SW4 (reset) to cancel the old values from the memory

5 TIME MOTOR OFF

Adjust the delay (240 seconds ex factory)

SW2 = decreases the value

SW3 = decreases the value

SW1 = press to memorise

Then press SW4 (reset) to cancel the old values from the memory

Per informazioni:
www.updinamic.com
E-mail: info@updinamic.com
Tel. + 39.0442.590.129
Fax +39.0442.599.091
Via Franco Modigliani, 22
37045 - Legnago (VR) Italy

6 TIME/CALENDAR

Select:

SW2 = to set the clock

SW3 = to set the calendar

Set the time:

SW2 = to enter programming

SW2 = select HOUR or MINUTES or ORE o MINUTI or SECONDS

SW3 = to increase the selected parameter

SW1 = to save and press again to exit

Set the calendar:

SW2 = to enter programming

SW2 = select YEAR or MONTH or DAY

SW3 = to increase the selected parameter

SW1 = to save and press again to exit

7 ERROR MESSAGE

SW2 = display the next alarm

SW3 = display the previous alarm

SW4 = to exit the menu

8 CLEAR ERR. MEM

SW2 = to exit the page

SW3 = to cancel the alarms memory

Via Franco Modigliani 22 37045 Legnago (Vr) – IT info@updinamic.com Tel +39.0442.59.01.29 Fax +39.0442.59.90.91 **www.updinamic.com**

Per informazioni:
www.updinamic.com
E-mail: info@updinamic.com
Tel. + 39.0442.590.129
Fax +39.0442.599.091
Via Franco Modigliani, 22
37045 - Legnago (VR) Italy

CONNECTION OF THE POWER SUPPLY TO THE CARD

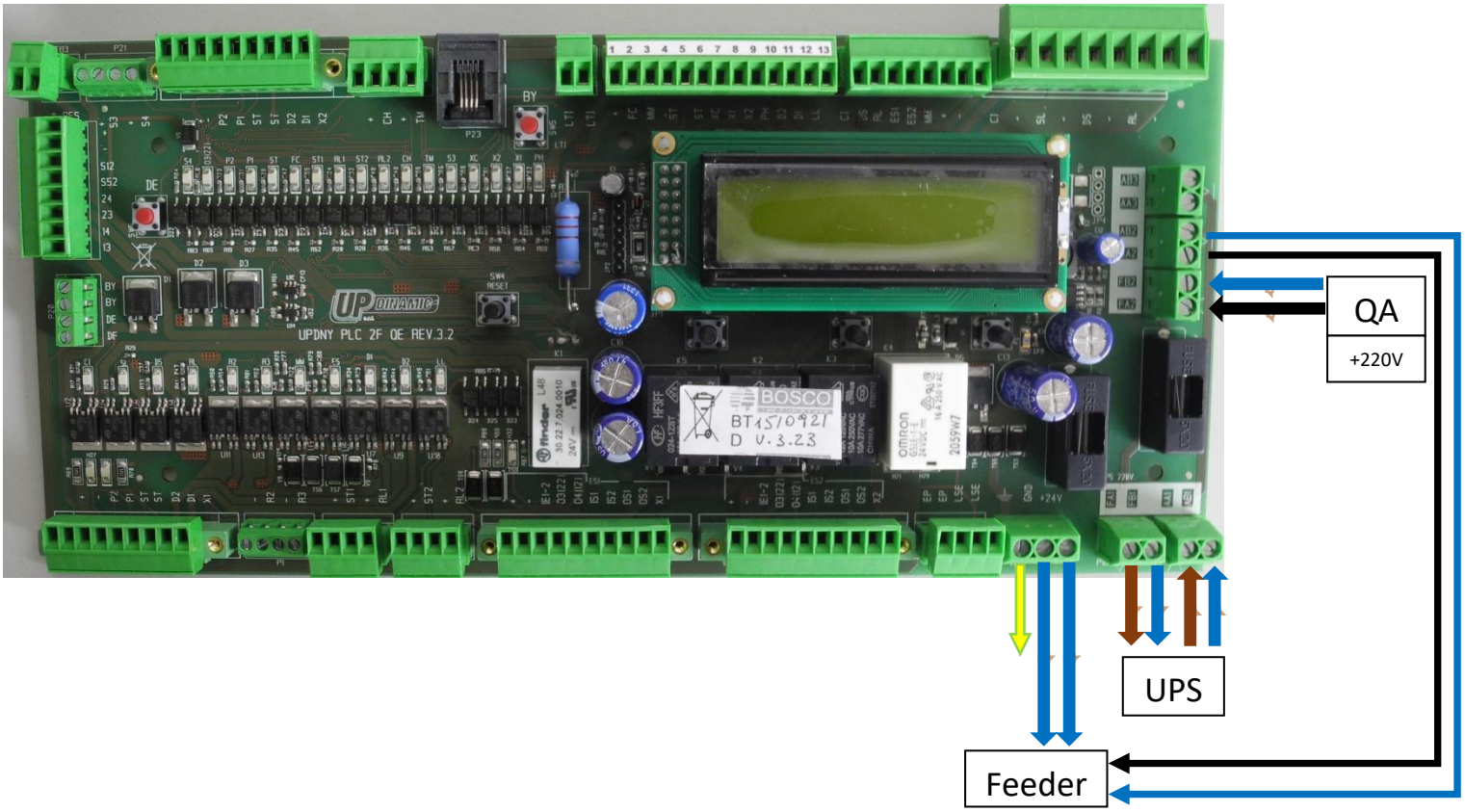

Per informazioni:
www.updinamic.com
E-mail: info@updinamic.com
Tel. + 39.0442.590.129
Fax +39.0442.599.091
Via Franco Modigliani, 22
37045 - Legnago (VR) Italy

TEMPORARY BRIDGES FOR INSTALLATION/MAINTENANCE:

ORANGE = GO UP CI ⟷ +

VIOLET = DOWN SLOW DS ⟷ +

VIOLET+BLUE = DOWN FAST DS ⟷ + ⟷ RL

GREEN = PWR HOOKS MM ⟷ +

RED = PWR LOCK (P1) ES1 ⟷ +

= PWR LOCK (P2) ES2 ⟷ +

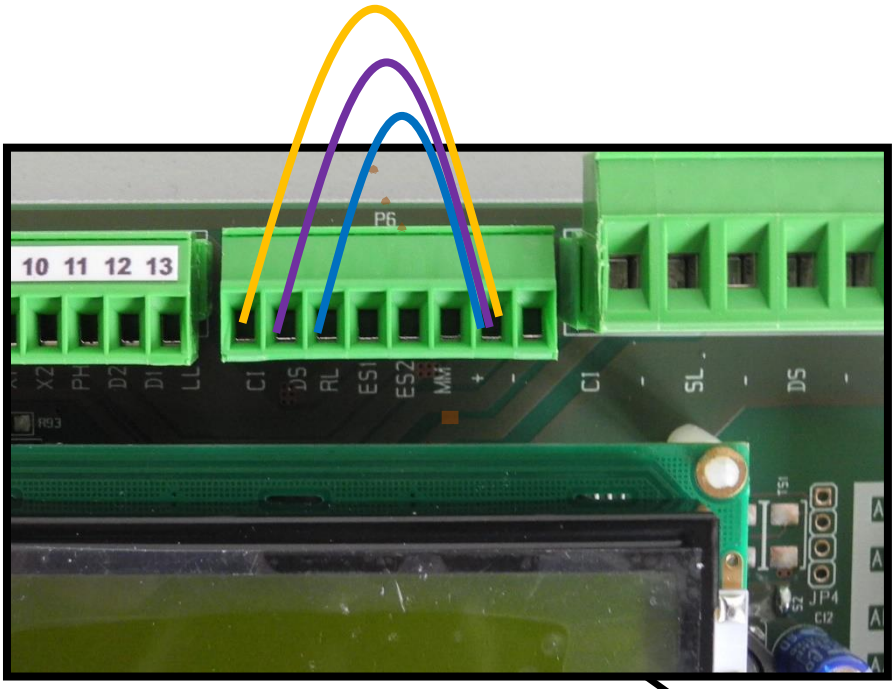

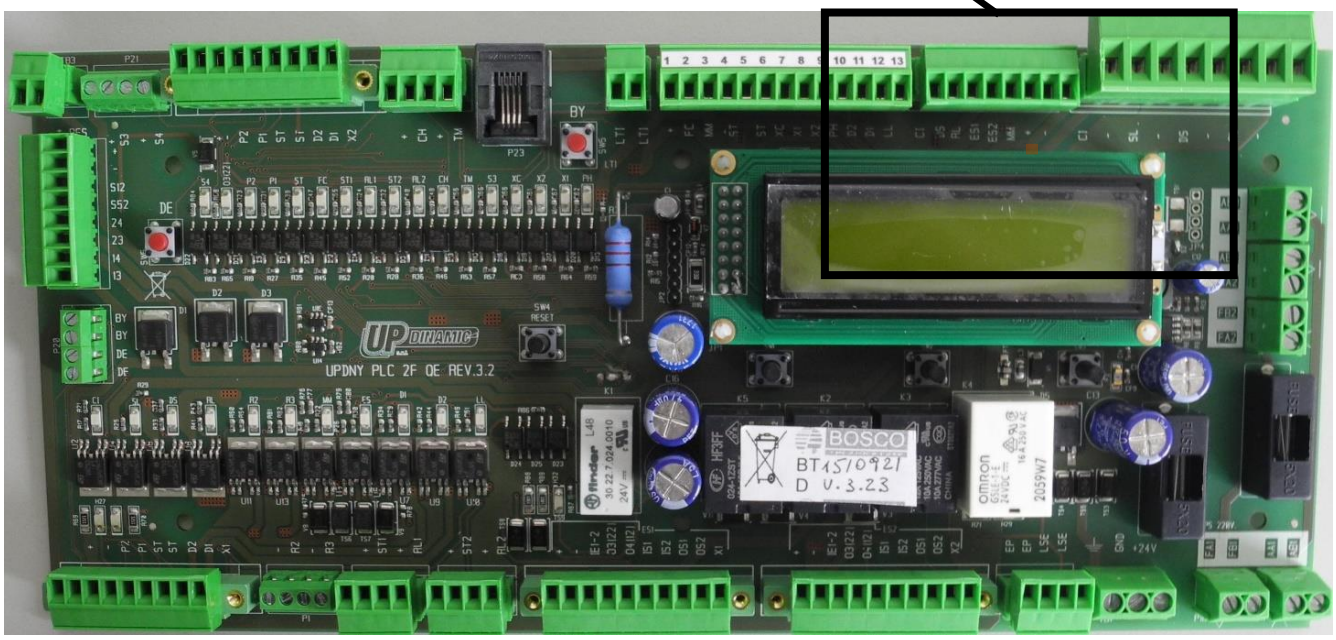

Per informazioni:
www.updinamic.com
E-mail: info@updinamic.com
Tel. + 39.0442.590.129
Fax +39.0442.599.091
Via Franco Modigliani, 22
37045 - Legnago (VR) Italy

UP 3 – 4 STOPS- ENTRY-EXIT LEGEND

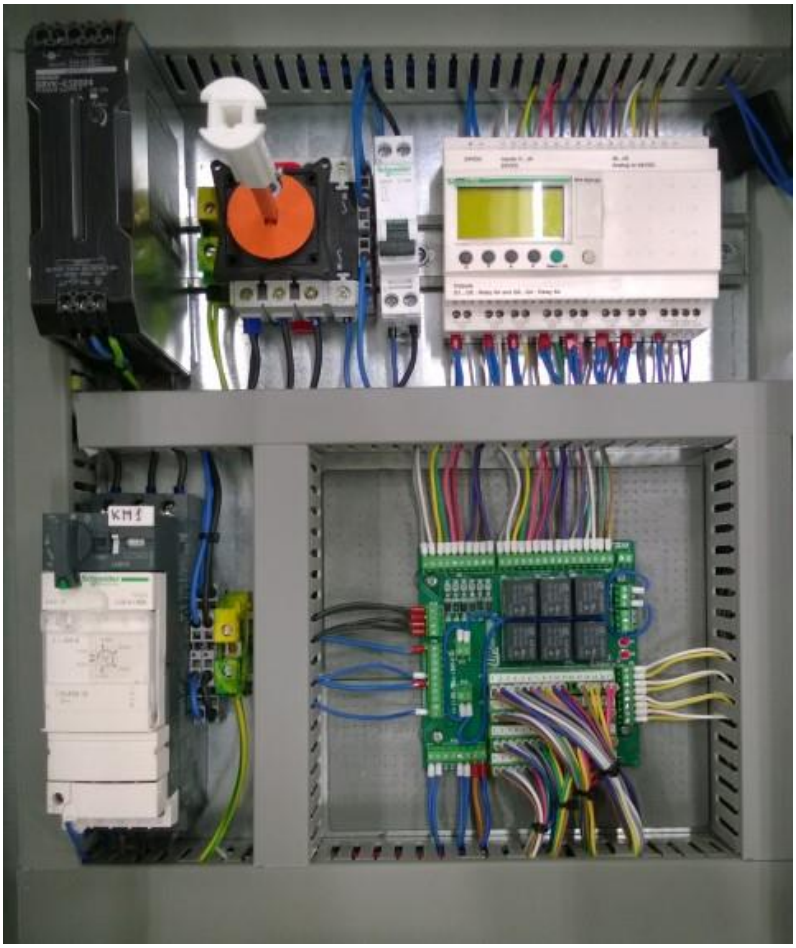

ENTRIES (Display upper line)

I1 = Button on floor P1

I2 = Button on floor P2

I3 = Button on floor P3

I4 = Button on floor P4

I5 = Deceleration Limit Switch P1

I6 = Stop Limit Switch at P1

I7 = Deceleration Limit Switch P2

I8 = Stop Limit Switch at P2

I9 = Deceleration Limit Switch P3

IA = Stop Limit Switch at P3

IB = Deceleration Limit Switch P4

IC = Stop Limit Switch at P4

ID = Free

IE = Hooks proximity switch reading

IF = Series doors closed

IG = Emergency Stop series

OUTPUTS (Lower line of display)

Q1 = Hydraulic control unit

Q2 = Solenoid ascent (not used)

Q3 = Solenoid descent

Q4 = Solenoid deceleration

Q5 = Magnets power supply

Q6 = Power supply to electric locks

Q7 = Lamp on floor P1

Q8 = Lamp on floor P2

Q9 = Lamp on floor P3

QA = Lamp on floor P4

Per informazioni:
www.updinamic.com
E-mail: info@updinamic.com
Tel. + 39.0442.590.129
Fax +39.0442.599.091
Via Franco Modigliani, 22
37045 - Legnago (VR) Italy

UP 3 – 4 STOPS- ENTRY-EXIT LEGEND

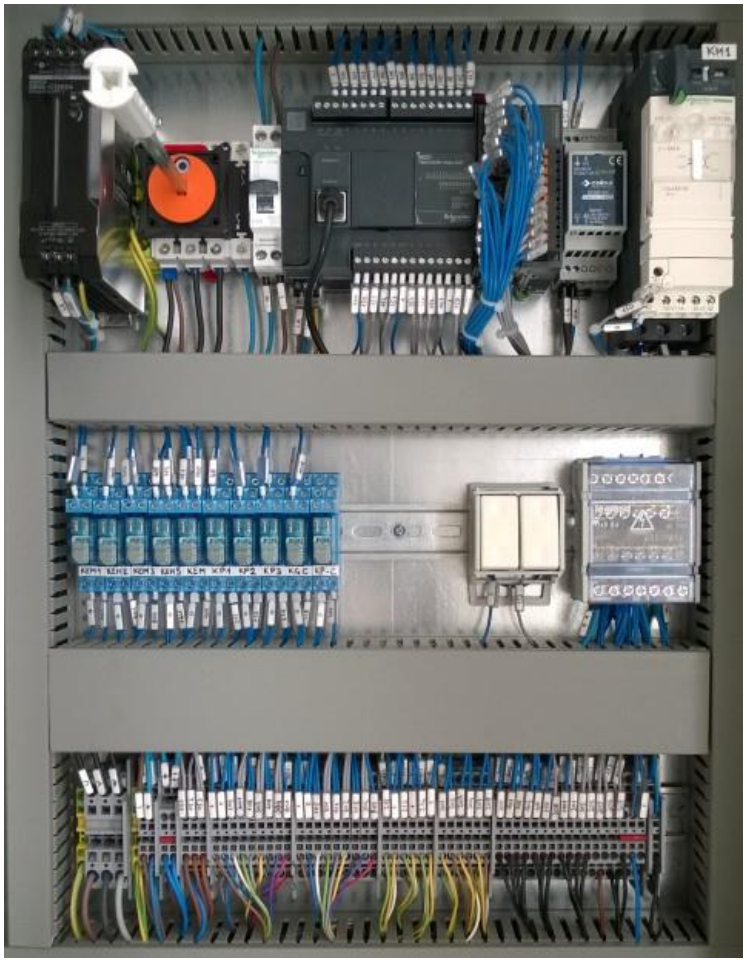

MAIN MODULE EXITS

I0 = Common button on board

I1 = Button on board 1

I2 = Button on board P2

I3 = Button on board P3 (for 4 stops only)

I4 = Button on board P4 (P3 for 3 stops only)

I5 = External button P1

I6 = External button P2

I7 = External button on board P3 (for 4 stops only)

I8 = External button on board P4 (P3 for 3 stops only)

I9 = Hooks proximity switch reading

I10 = Photocells on board

I11 =External emergency stop

I12 =Internal emergency stop

I13 = Chain slackening limit switch

MAIN PLATFORM EXITS

QA = Hydraulic control unit

Q1 = Solenoid ascent/accumulator

Q2 = Solenoid Deceleration

Q3 = Solenoid descent

Q4 = Lock power supply P1

Q5 = Lock power supply P2

Q6 = Lock power supply P3 (for only 4 stops)

Q7 = Lock power supply P4 (P3 for only 3 stops)

Q8 = Hooks proximity switch reading

Q9 = Free

Per informazioni:
www.updinamic.com
E-mail: info@updinamic.com
Tel. + 39.0442.590.129
Fax +39.0442.599.091
Via Franco Modigliani, 22
37045 - Legnago (VR) Italy

ENTRANCES EXTENSION MODULE

I0 = Free

I1 = Stop Limit Switch at P1 (low)

I2 = Deceleration Limit Switch P1 (low)

I3 = Stop Limit Switch at P2

I4 = Deceleration Limit Switch P2

I5 = Stop Limit Switch at P3 (for 4 stops only)

I6 = Deceleration Limit Switch P3 (for only 4 stops)

I7 = Stop Limit Switch at P4 (P3 for 3 stops only)

I8 = Deceleration Limit Switch P4 (P3 for only 3 stops)

I9 = Free

I10 = Free

I11 = Electric lock contact P1

I12 = Electric lock contact P2

I13 = Electric lock contact P3 (for only 4 stops)

I14 = Electric lock contact P4 (P3 for 3 stops)

I15 =Free

EXTENSION MODULE MAIN EXITS

Q0 = On-board courtesy light

Q1 = Lamp on floor P1

Q2 = Lamp on floor P2

Q3 = Lamp floor P3 (for only 4 stops)

Q4 = Lamp floor P4 (P3 for 3 stops)

Q5 = Free

Q6 = Free

Q7 = Free

Per informazioni:
www.updinamic.com
E-mail: info@updinamic.com
Tel. + 39.0442.590.129
Fax +39.0442.599.091
Via Franco Modigliani, 22
37045 - Legnago (VR) Italy

MACHINE SETTING

If the contents of the preceding chapter have been correctly carried out, the machine is now ready to be set in motion and calibrated.

Procedure for putting the lift into service

To put the lift into service proceed in respect of the following sequence:

1. Connect the external pushbutton panels and check the efficiency of the emergency mushroom head button
2. Manually check the functioning of the floor limit switches (deceleration and stop)
3. Check for correct correspondence of the limit switches of the high floor (i.e. not erroneously inverting the limit switches of a floor with respect to those of another floor during assembly)
4. TAKE EXTREME CARE AND ONLY IF THE SITE CONDITIONS ALLOW IT, bypass the closed door system so as to be able to physically see the platform move. WARNING!! This manoeuvre must be carried out only at the first putting into service by expert personnel and with the presence of at least 2 persons where one must remain close to an emergency button
5. Starting from the low plane check that the machine carries out the set cycles
6. If all the cycles have given a positive outcome reset the sensors of the closed doors and test their efficiency
7. Test the machine repeatedly with a load equal to the maximum capacity and if necessary calibrate the calibration of the limit switches and/or the deceleration

Machine cycle

The machine must correctly carry out the following cycles: to facilitate the explanation some abbreviations will be used:

P1 = Low floor

RL1 = Deceleration limit switch low floor

ST1 = Stop limit switch low floor

PX = hooks reading sensor not engaged (if =1 machine can ascend/descend normally)

MM = safety hooks activating magnets (if = 1 the hooks exit and the machine can only descend at low speed up to the limit switch of the nearest floor)

Per informazioni:
www.updinamic.com
E-mail: info@updinamic.com
Tel. + 39.0442.590.129
Fax +39.0442.599.091
Via Franco Modigliani, 22
37045 - Legnago (VR) Italy

ASCENT CYCLE

Starting condition:

Machine halted on a floor and obviously all safety devices active:

Activate the descent button

- ➔ The hydraulic control unit immediately starts
- ➔ The machine starts in ascent at normal speed
- ➔ The proximity signal is received
- ➔ The machine reaches ST2 and continues on its travel
- ➔ The machine reaches RL2 and immediately activates MM
- ➔ PX loses the reading (hooks inserted)
- ➔ The machine reaches ST2 at low speed and locks (delay of about 1 sec)
- ➔ After a few seconds the hydraulic control unit switches off

DESCENT CYCLE

Starting condition:

Machine halted on a floor and obviously all safety devices active:

Activate the descent button

- ➔ The hydraulic control unit immediately starts
- ➔ The machine starts in ascent up to RL2
- ➔ The proximity signal is received
- ➔ The machine switches and starts in normal descent speed
- ➔ After a few seconds the hydraulic control unit switches off (correct)
- ➔ The machine reaches RL1 and immediately activates MM (*note 1*)
- ➔ PX loses the reading (hooks inserted)
- ➔ The machine engages low speed and proceeds with the descent
- ➔ The machine reaches ST2 and locks (delay of about 1 sec)

NOTE 1

During this step of the descent the machine has a software routine which causes the machine travel to continue even if the PX has not lost the signal for about 1 second: if in this section the PX signal is not lost

Per informazioni:
www.updinamic.com
E-mail: info@updinamic.com
Tel. + 39.0442.590.129
Fax +39.0442.599.091
Via Franco Modigliani, 22
37045 - Legnago (VR) Italy

UNLOCKING THE LANDING DOORS

If for unexpected reasons you cannot open the landing doors equipped with an external electric lock by manual force, you can operate as follows:

NB: This operation is to be carried out with the platform at the floor from where you want to access!
IF THE LOCK IS RELEASED WITH THE PLATFORM NOT AT THE FLOOR, THERE IS A RISK OF FALLING.

- Release the electric lock; the unpowered electric lock can be released by following the instructions below:

1) Unscrew the setscrew

2) Using a simple screwdriver to turn the slider from the “locked” to the “open” position

- open the landing door following the unlocking instructions of the installed automation.

On conclusion of the operations reset the electric lock contact

Per informazioni:
www.updinamic.com
E-mail: info@updinamic.com
Tel. + 39.0442.590.129
Fax +39.0442.599.091
Via Franco Modigliani, 22
37045 - Legnago (VR) Italy

DOORS INTERFACE

(only with automatic doors)

Connect the doors using the supplied interface.

Functions of the interfacing card:

- Connection of interlock device (Electric lock)
- Connection of door motor phases to prevent activation with the system between levels
- Connection of opening signal (IMP) for prohibiting sending of the opening signal with the system between levels
- Management of the door (ST) STOP contact to block the door with the system between levels
- Connection of the transmitter for management of the opening signal
- "Door in action" light connection

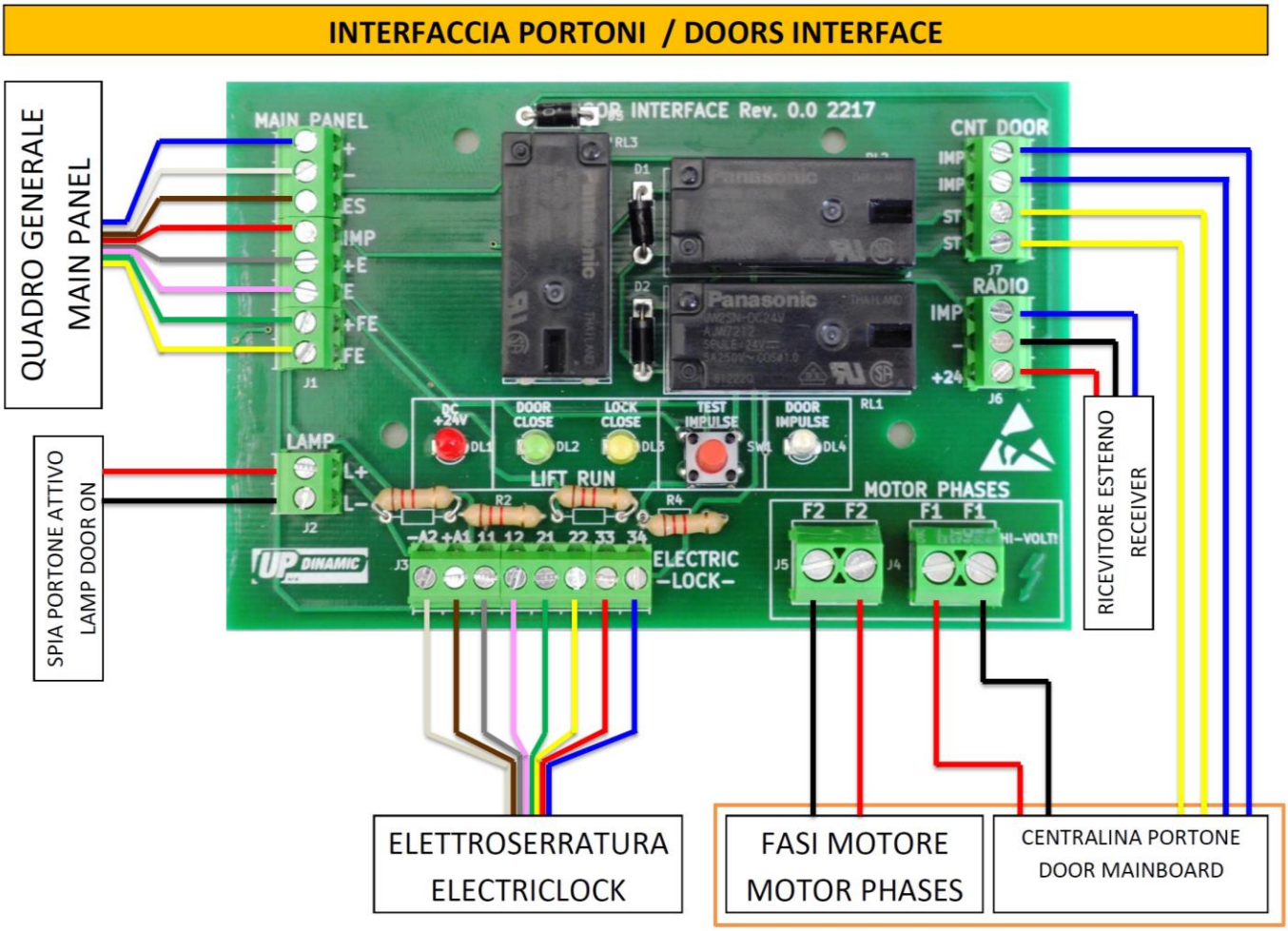

Per informazioni:
www.updinamic.com
E-mail: info@updinamic.com
Tel. + 39.0442.590.129
Fax +39.0442.599.091
Via Franco Modigliani, 22
37045 - Legnago (VR) Italy

RFID Pizzato Sensor wiring

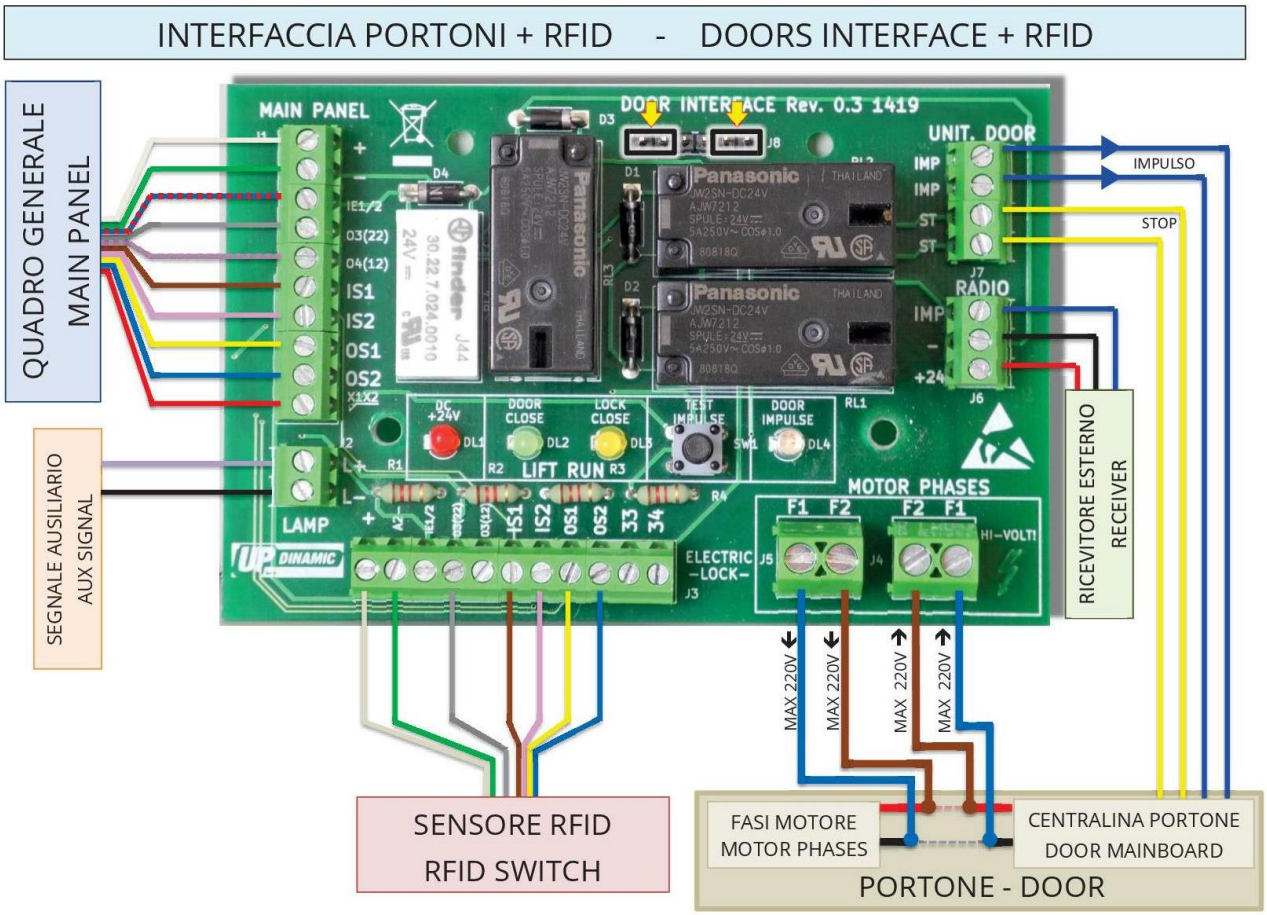

Per informazioni:
www.updinamic.com
E-mail: info@updinamic.com
Tel. + 39.0442.590.129
Fax +39.0442.599.091
Via Franco Modigliani, 22
37045 - Legnago (VR) Italy

EMERGENCY PROCEDURE FROM THE PANEL (FOR AUTHORISED PERSONS ONLY)

VALID FOR 2 STOP GOODSLIFT

For installation and maintenance of car lifts and goods lifts, Art. 15 of Pres. Decree 162/99 requires that the system owner appoint a person holding an appropriate certificate of qualification
(LETTER "F") issued by the prefecture.

Press the two buttons indicated at the **same time** to carry out the emergency descent

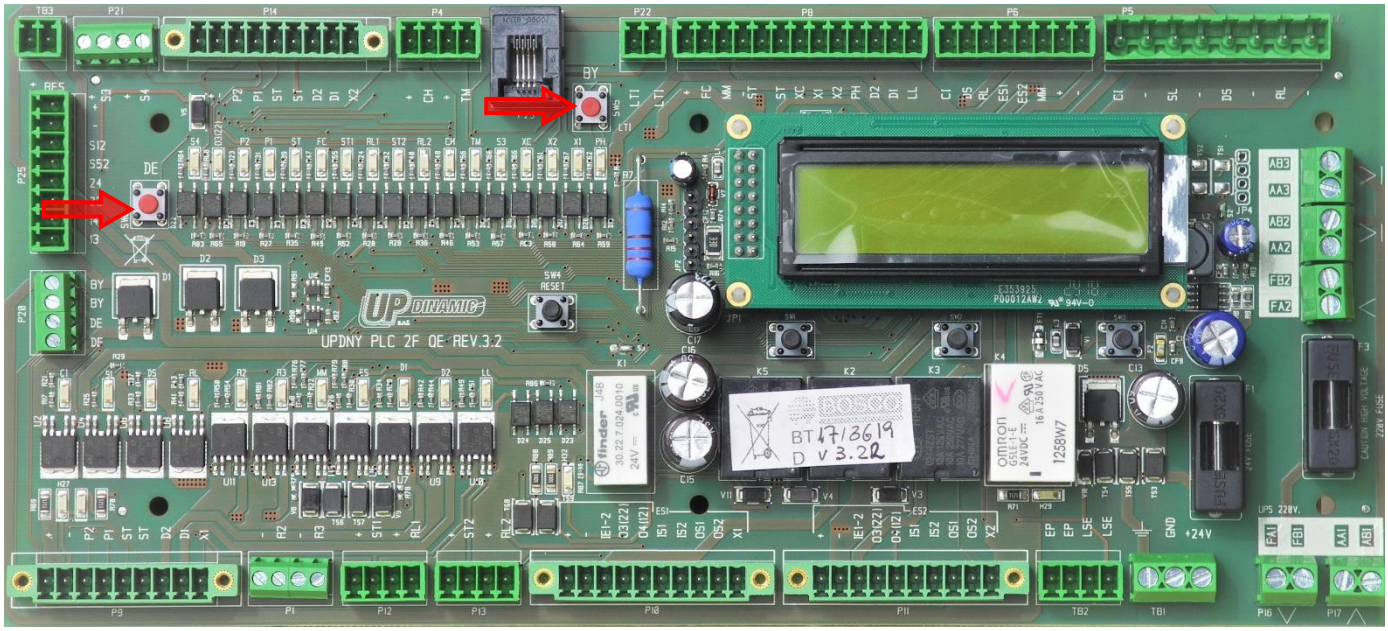

BYPASS BUTTON (BY)
- Bypass closed door contact
- Bypass stop
- Bypass photocells
- Bypass emergency stop

DESCENT BUTTON (DE)
Actuate the descent valve with deadman command

WARNING: NO SAFETY DEVICE IS ACTIVE DURING MOVEMENT

Wait until the platform reach the lower floor, the display will indicate when the platform reach the floor

Per informazioni:
www.updinamic.com
E-mail: info@updinamic.com
Tel. + 39.0442.590.129
Fax +39.0442.599.091
Via Franco Modigliani, 22
37045 - Legnago (VR) Italy

VALID FOR 3/4/5 STOP GOODSLIFT

For installation and maintenance of car lifts and goods lifts, Art. 15 of Pres. Decree 162/99 requires that the system owner appoint a person holding an appropriate certificate of qualification
(LETTER "F") issued by the prefecture.

Press the two buttons at the same time to carry out the emergency descent

FIRST BYPASS BUTTON (BY):

By Pass – Safety devices + enables Descent Button (DE)

- Doors-closed contact bypass
- Stop bypass
- Photocell bypass
- Emergency stop bypass

SECOND RIGHT DESCENT BUTTON:

it powers the two descent valves with jog control.

WARNING: NO SAFETY DEVICE IS ACTIVE DURING MOVEMENT

Per informazioni:
www.updinamic.com
E-mail: info@updinamic.com
Tel. + 39.0442.590.129
Fax +39.0442.599.091
Via Franco Modigliani, 22
37045 - Legnago (VR) Italy

ADAPTING THE ELECTRIC LOCKS TO UNI EN ISO 14119:2013

As the system complies with the safety standards, the following modifications need to be made on the interlock devices
Connect the 6x0.5 cable according to the diagram provided (if the system is adapted, the old 4x0.5 cable should be replaced)

11 Pink	12 Grey	Coil excited signal
21 Green	22 Yellow	Door closed signal Preliminary
A1 White	A2 Brown	24VDC coil power supply

After testing the system, seal the lock to prevent its release and make sure that you keep the slider in profile

To fasten the actuator, use the OneWay screws provided
(M5 anti-loosening screws and self-locking nuts)

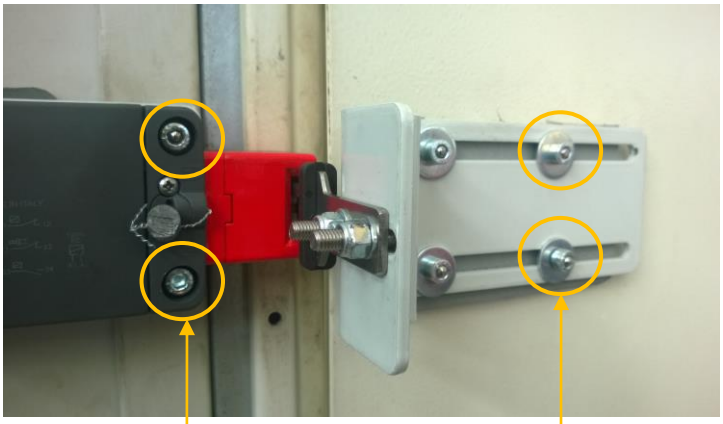

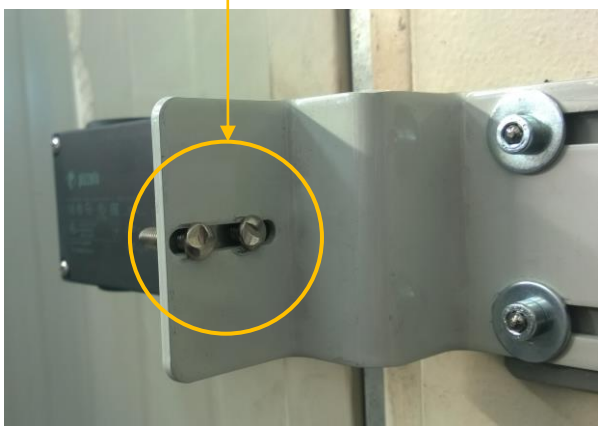

Only after checking proper functioning of the locks, fit the spheres provided to prevent the screws from unscrewing and hence removing the locks and the actuator (use self-locking nuts)

Per informazioni:
www.updinamic.com
E-mail: info@updinamic.com
Tel. + 39.0442.590.129
Fax +39.0442.599.091
Via Franco Modigliani, 22
37045 - Legnago (VR) Italy

POWER IN THE ELECTRIC PANEL:

In case of systems with UPS, to cut the power in the electric panel, be sure to disconnect the power supply from the UPS before opening the panel.

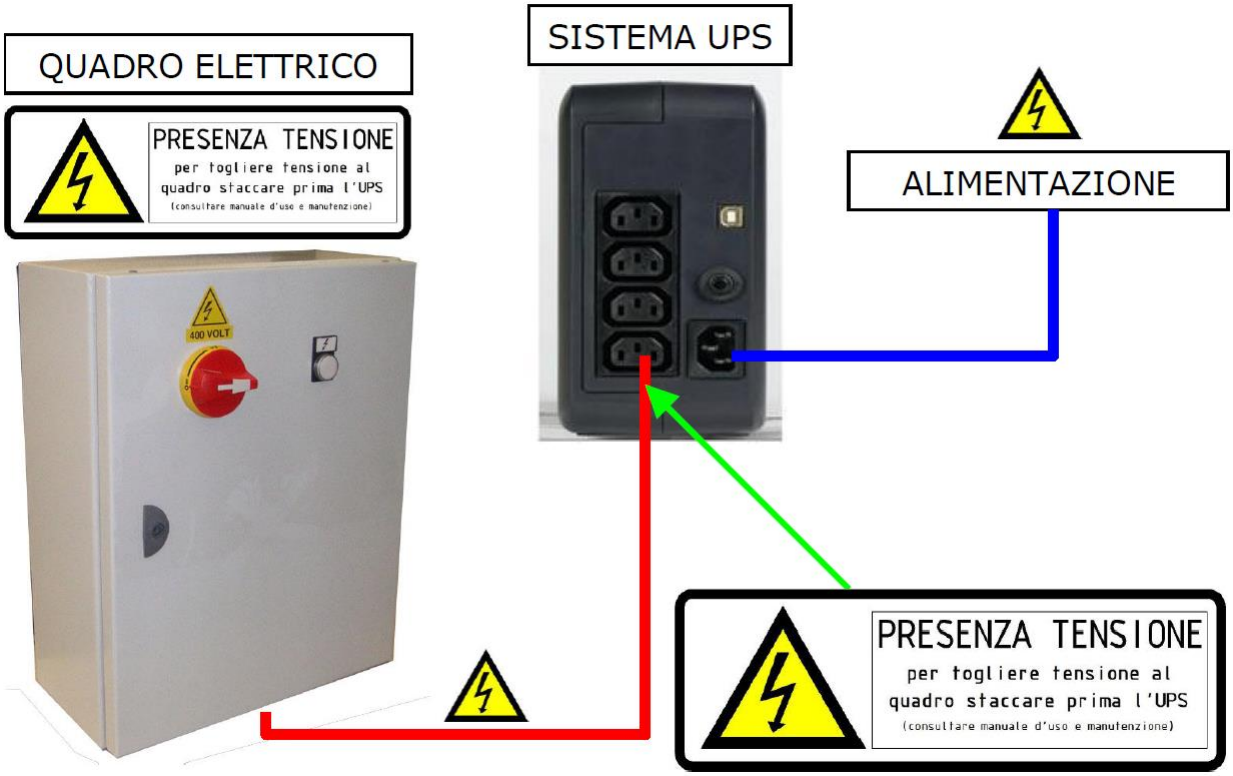

In the case of a good s lift with UPS: replace the batteries every 2 years

Via Franco Modigliani 22 37045 Legnago (Vr) – IT info@updinamic.com Tel +39.0442.59.01.29 Fax +39.0442.59.90.91 **www.updinamic.com**

Per informazioni:
www.updinamic.com
E-mail: info@updinamic.com
Tel. + 39.0442.590.129
Fax +39.0442.599.091
Via Franco Modigliani, 22
37045 - Legnago (VR) Italy

PHOTOCELLS ON BOARD THE CABIN

The open sides of the cabin are provided with safety photocells.
2 photocell ranks are present on each side
It is sufficient to interrupt one rank only to halt the machine

When the photocells are interrupted, the light on-board the cabin lights up and remains lit while the photocells are occupied.

Frequent cleaning of the photocells is recommended.

Via Franco Modigliani 22 37045 Legnago (Vr) – IT info@updinamic.com Tel +39.0442.59.01.29 Fax +39.0442.59.90.91 **www.updinamic.com**

Per informazioni:
www.updinamic.com
E-mail: info@updinamic.com
Tel. + 39.0442.590.129
Fax +39.0442.599.091
Via Franco Modigliani, 22
37045 - Legnago (VR) Italy

CARATTERISTICHE TECNICHE / TECHNICAL DATA	
PORTATA/*RANGE*	0,1 ÷ 6 mt.
PROTEZIONE/*DEGREE OF PROTECTION*	IP 30 (IP 55 OPTIONAL CASE PROTECTION)
ALIMENTAZIONE/*SUPPLY VOLTAGE*	12 / 24 Volt AC-DC SENZA NECESSITÀ DI SETTAGGIO
ASSORBIMENTO/*SUPPLY CURRENT*	100 mA (LN1054.C) 130 mA (LN1056.C)
TEMPERATURA DI FUNZIONAMENTO/*OPERATING TEMPERATURE*	-15 ÷ +50°C
USCITA/*OUTPUT*	N.O. / N.C. RELAY CONTACT
PORTATA CONTATTO/*OUTPUT CONTACT*	5 A - 30 Volt DC / 0,9 A - 60 Volt DC PROTECTED BY EXTRA -TENSIONS
RAGGIO/*OPTICAL RAY*	INFRARED 900 nm
CONFORMITÀ/*APPROVALS*	89 / 336 / CEE
SERIE SENSORI COMPATIBILI/ *COMPATIBLE BEAMS*	PS 2003; PS 2007; PS 2010 ADATTATORI SPECIALI PER QUALSIASI TIPO DI CO-STA DI SICUREZZA *SPECIAL FITTINGS TO ANY SAFETY RIBS*

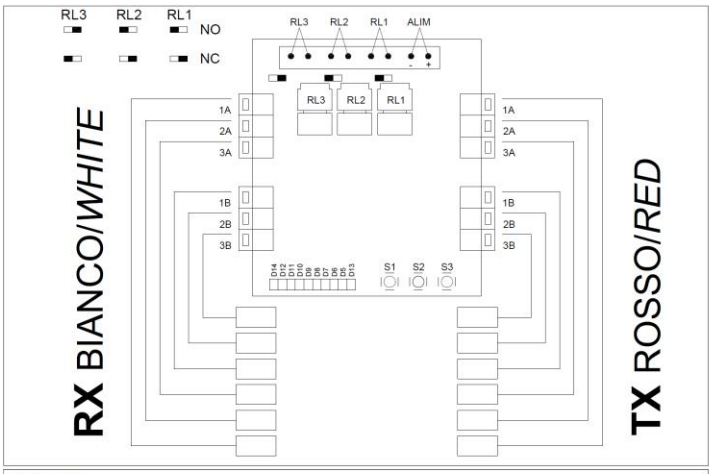

LED ATTIVI

D14 acceso presenza alimentazione.
D12 acceso relè RL1 eccitato, comandato dalla coppia di raggi 1A-1B allineati.
D11 acceso relè RL2 eccitato, comandato dalla coppia di raggi 2A-2B allineati.
D10 acceso relè RL3 eccitato, comandato dalla coppia di raggi 3A-3B allineati (solo LN1056.C).

CONFIGURAZIONE DEI RAGGI

Premere S2 per 5 sec. per attivare la funzione.

D9 acceso coppia in esame 1A-1B
D8 acceso coppia in esame 2A-2B
D7 acceso coppia in esame 3A-3B (solo LN1056.C)
} premere S2 per selezionare la coppia.

D6 acceso attivo raggio A della coppia in esame → stato non modificabile.
D5 acceso attivo raggio B della coppia in esame → si attiva o disattiva premendo S3.

D13 spento coppia in esame in configurazione OR
D13 acceso coppia in esame in configurazione AND → si attiva o disattiva premendo S1, unicamente se attivato il raggio B (D5 acceso).

Premere S2 per 5 sec. per memorizzare la configurazione e uscire dalla funzione.

REGOLAZIONE SENSIBILITA' RAGGI

Premere S1 per 5 sec. per attivare la funzione.
Il sistema calcola la potenza ottimale in funzione della distanza tra Tx e Rx.
Durante la fase di regolazione i led D9-8-7-6-5-13 lampeggiano sequenzialmente.
Al termine del lampeggio è possibile, se necessario, apportare una regolazione fine della potenza dei trasmettitori.

D9 lampeggiante = raggio 1A
D8 lampeggiante = raggio 2A
D7 lampeggiante = raggio 3A
D6 lampeggiante = raggio 1B
D5 lampeggiante = raggio 2B
D13 lampeggiante = raggio 3B
} premere S1 per selezionare il raggio da regolare.

Premere S2 per diminuire la potenza (il led del raggio lampeggia più velocemente).
Premere S3 per aumentare la potenza (il led del raggio lampeggia più lentamente).
Premere S1 per 5 sec. per memorizzare la regolazione e uscire dalla funzione.

RITORNO ALLA CONFIGURAZIONE DI FABBRICA (DEFAULT)

Premere S3 per 5 sec. un rapido lampeggio dei led segnala il ripristino della configurazione di fabbrica.

CONFIGURAZIONE DI FABBRICA (DEFAULT)

La centralina viene fornita con tutti i raggi attivi e le coppie in configurazione OR alla massima potenza.

LEDS ON

D14 on input
D12 on RL 1 is controlled by 1A-1B lined up beam pair
D11 on RL 2 is controlled by 2A-2B lined up beam pair
D10 on RL 3 is controlled by 3A-3B lined up beam pair (only LN 1056.C)

BEAMS' CONFIGURATION

Push S2 key for 5 seconds continuously to activate the function.

D9 on pair 1A-1B
D8 on pair 2A-2B
D7 on pair 3A-3B (only LN 1056.C)
} push S2 key to select the pair

D6 on beam "A" of the selected pair is active → not modifiable condition
D5 on beam "B" of the selected pair is active → it can be on/off by pushing S3

D13 off pair in "OR" configuration
D13 on pair in "AND" configuration → it can be on/off by pushing S1, only in the case " beam "B" is on (D5 on)

Push S2 for 5 seconds to save the configuration and to log out.

BEAMS' SENSITIVITY ADJUSTING

Push S1 key for 5 seconds continuously to activate the function.
The device calculates the optimum power according to the distance between TX and RX.
During the adjusting process D9-D8-D7-D6-D5-D13 leds blink sequentially.
When the leds' blinking is finished, if necessary, it is possible to regulate the transmitters power.

D9 blinking = 1A beam
D8 blinking = 2A beam
D7 blinking = 3A beam
D6 blinking = 1B beam
D5 blinking = 2B beam
D13 blinking = 3B beam
} push S1 key to select the beam to adjust

Push S2 to reduce the power (the led blinks faster).
Push S3 to increase the power (the led blinks slowly).
Push S1 for 5 seconds to save the adjusting and log out.

RETURN TO FACTORY SETTING (DEFAULT)

Push S3 for 5 seconds and a rapid leds' blinking indicates the return to factory configuration.

FACTORY CONFIGURATION (DEFAULT)

The control unit is equipped with operating beams and with beam pairs in "OR" configuration at the maximum power.

SPESSORE LAMIERA	DIAMETRO FORATURA
0,8 - 1,5 mm	Ø 13
1,5 - 2,5 mm	Ø 13,5
> 2,5 mm	Ø 14

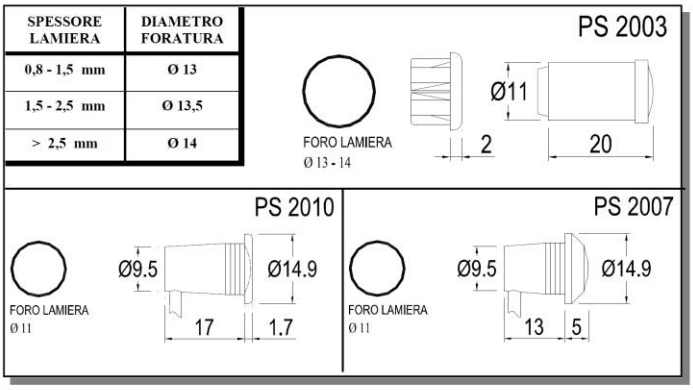

Per informazioni:
www.updinamic.com
E-mail: info@updinamic.com
Tel. + 39.0442.590.129
Fax +39.0442.599.091
Via Franco Modigliani, 22
37045 - Legnago (VR) Italy

PHOTOCELLS ON BOARD THE PLATFORM

In a case of open sides on board the platform, the zone must be protected with photocells on board the platform.

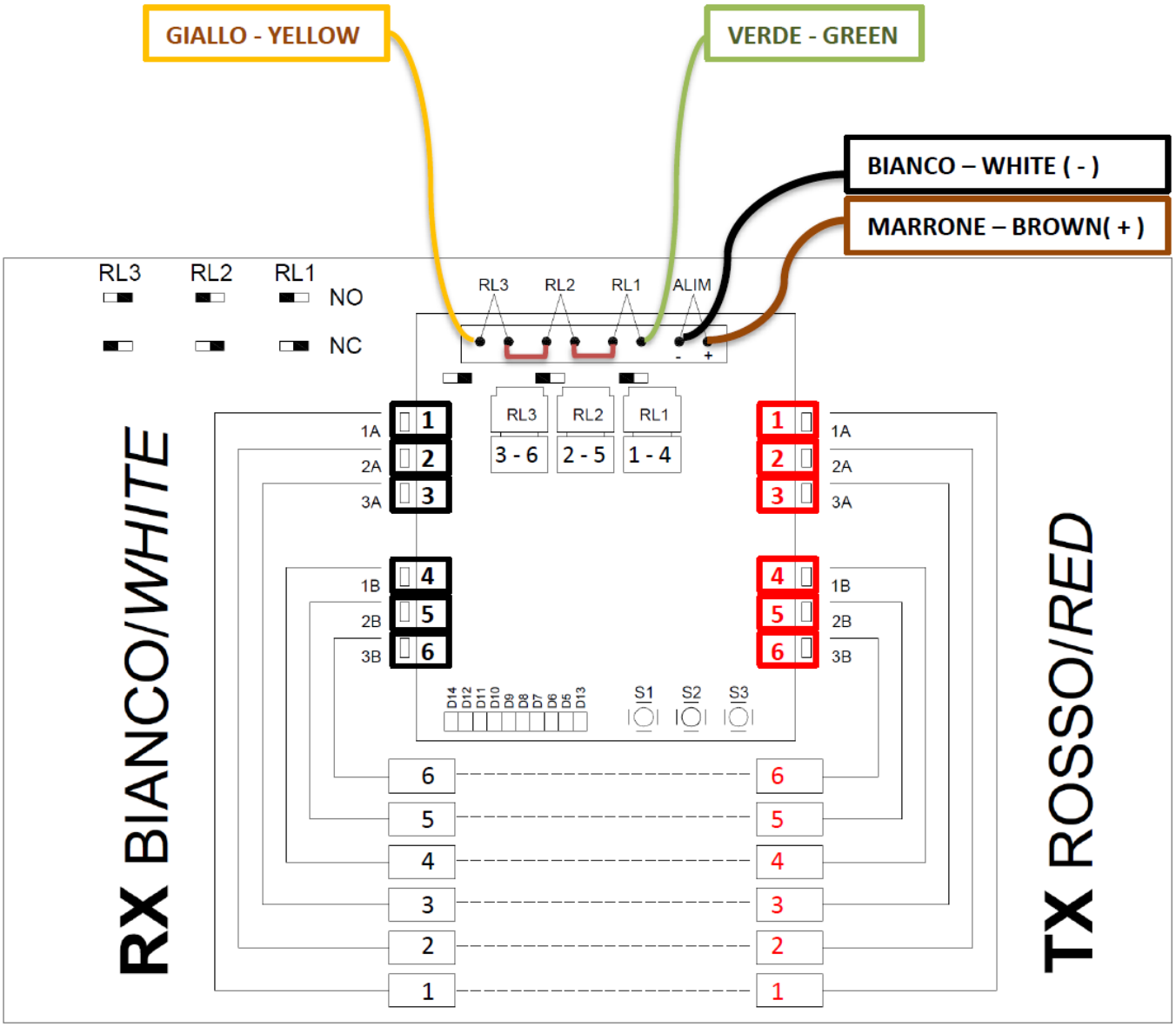

Per informazioni:
www.updinamic.com
E-mail: info@updinamic.com
Tel. + 39.0442.590.129
Fax +39.0442.599.091
Via Franco Modigliani, 22
37045 - Legnago (VR) Italy

CONNECTION ON BOARD SPB

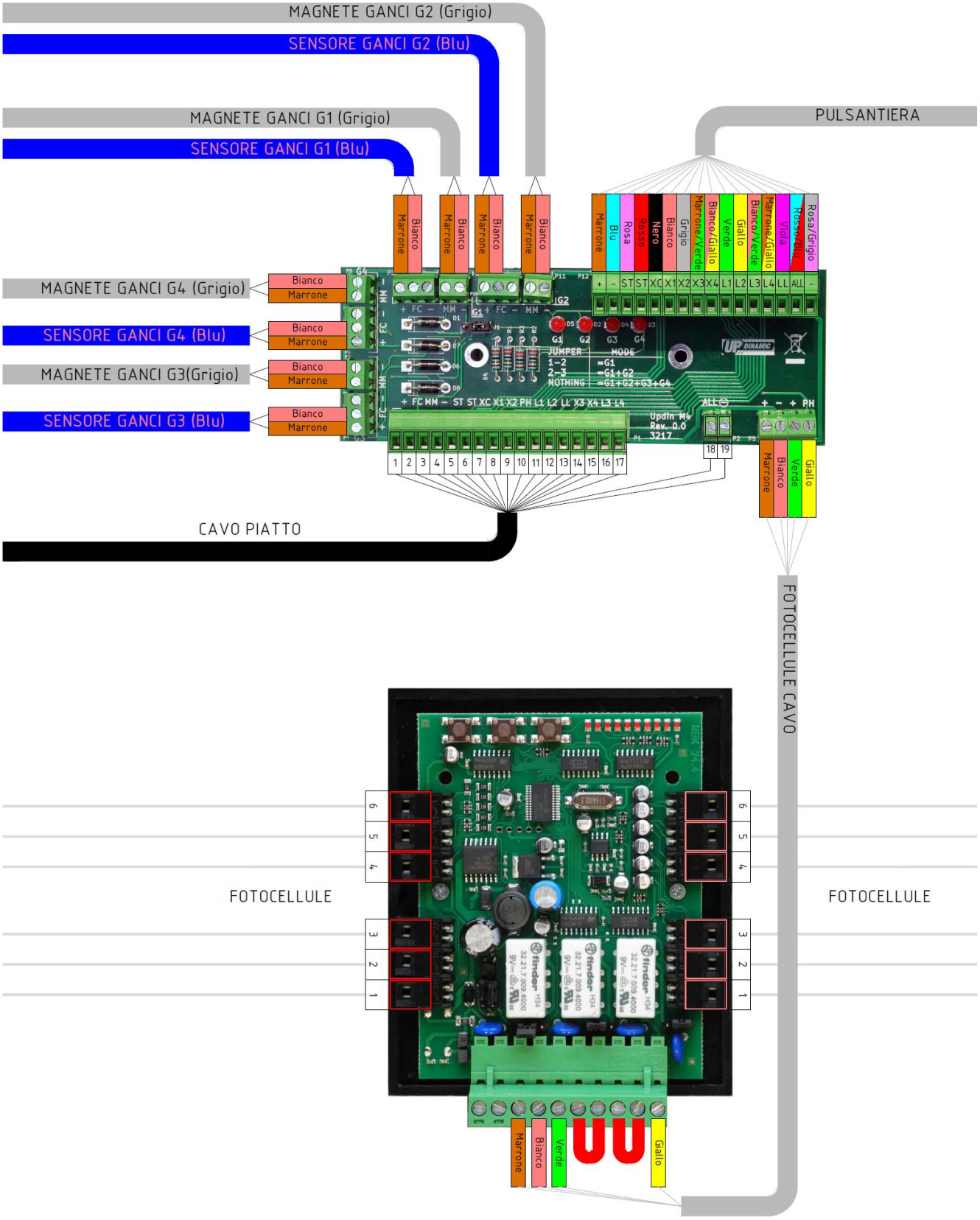

Per informazioni:
www.updinamic.com
E-mail: info@updinamic.com
Tel. + 39.0442.590.129
Fax +39.0442.599.091
Via Franco Modigliani, 22
37045 - Legnago (VR) Italy

PROGRAMMING REMOTE RESCUE HELPYVOX MODEL

Dial the dialler number, wait for it to ring twice and for the connecting tone; then proceed with entering the access codes.

ACCESS CODES:

ACCESS TO PROGRAMMING ***0#**

EXIT FROM PROGRAMMING***0#**

PROGRAMMING CODES (These can be entered following access):

TELEPHONE NUMBER **210112***TELEPHONE NUMBER***#**

CANCEL TELEPHONE NUMBER **210112#**

RECORD A MESSAGE**7101** Recording up to 20 seconds, until the beep sounds

ACTIVATION OF LOUDSPEAKERS **780** Activation of loudspeakers using number “0”

781 Activation of automatic response loudspeakers

AUTOMATIC RESET **770** Automatic reset on conclusion of each call

771 Reset with end code, no.“9”

FACTORY SETTINGS **99** Reset factory settings

RESPOND TO THE ALARM

- Respond and listen to the message
- Press 0 to speak with the trapped person
- Press 9 to reset the alarm

Per informazioni:
www.updinamic.com
E-mail: info@updinamic.com
Tel. + 39.0442.590.129
Fax +39.0442.599.091
Via Franco Modigliani, 22
37045 - Legnago (VR) Italy

MECHANICAL LIMIT SWITCHES AT FLOOR

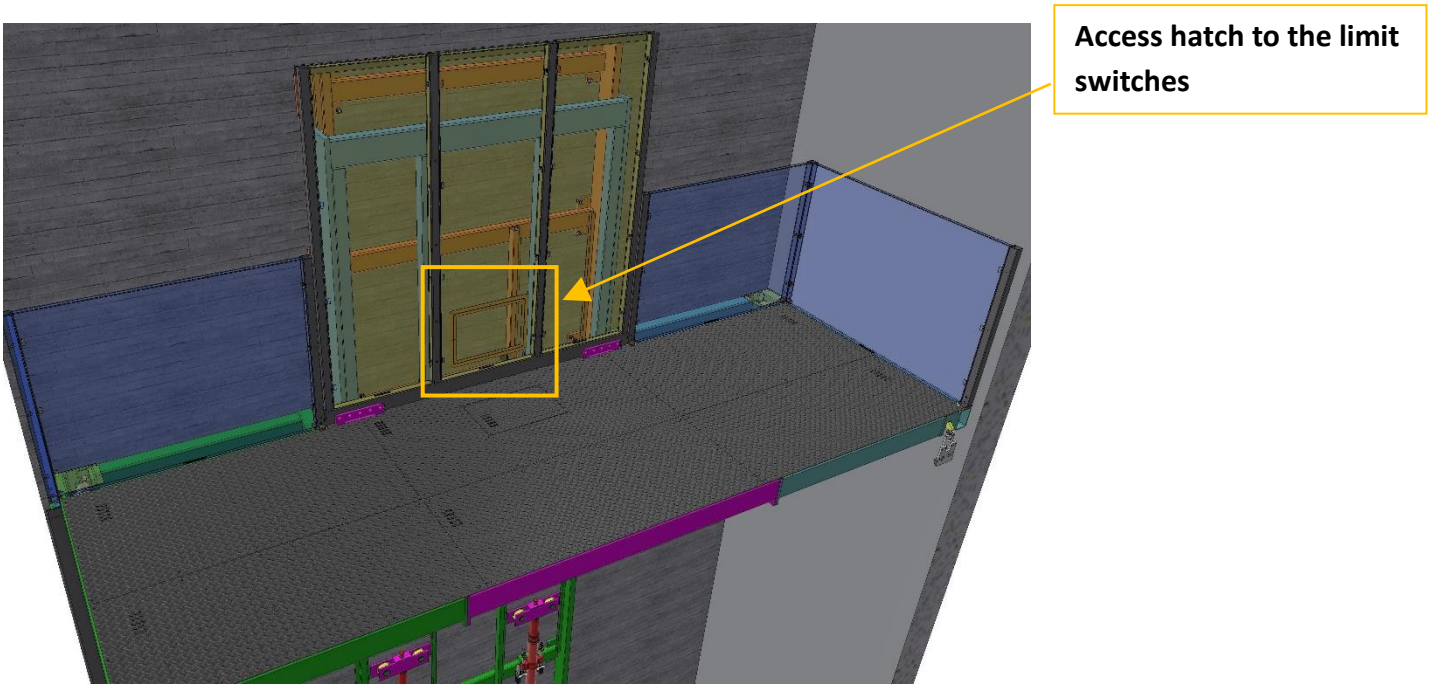

Carefully place the galvanized plate making sure that when the platform arrive at floor the *Stop limit switch sensor* is clicked.

N.B. The stop of the loading platform has a slight programmable delay, it allowing the correct positioning on the hooks and the unloading of the chains.

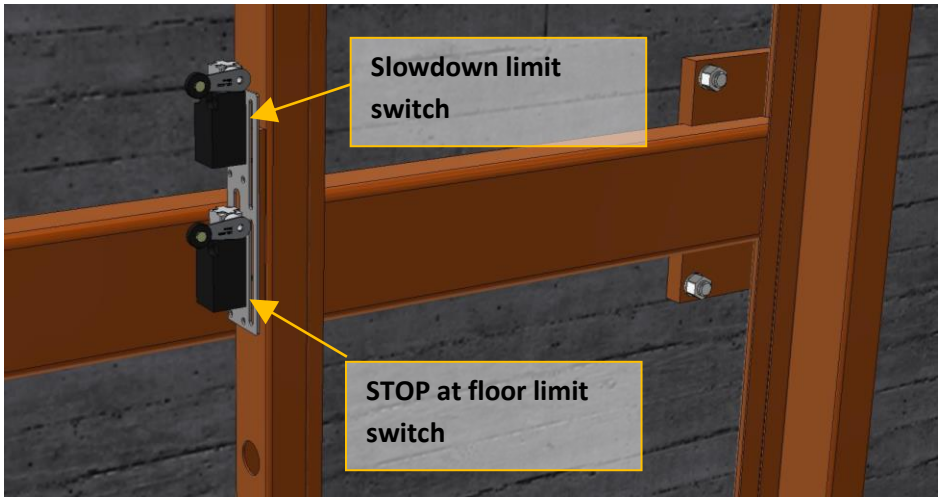

<u>Arrival on the lower floor</u>:

- Click the slowdown limit switch: Start slow speed descent + Hooks activated
- Click stop at floor limit switch: Ends the cycle and unlock the doors electriclock

<u>Arrival on the top floor</u>:

- Click stop at floor limit switch: The platform continue the ascent cycle and overcoming the floor
- Click the slowdown limit switch: Stop ascent + Hooks activated + start lower speed descent
- Click stop at floor limit switch: Ends the cycle and unlock the doors electriclock

N.B. At the upper floor the goodslift make an extra stroke in order to allow the hooks activating, then it starts the lower speed descent and the positioning at floor.

Per informazioni:
www.updinamic.com
E-mail: info@updinamic.com
Tel. + 39.0442.590.129
Fax +39.0442.599.091
Via Franco Modigliani, 22
37045 - Legnago (VR) Italy

OPERATING LOGIC

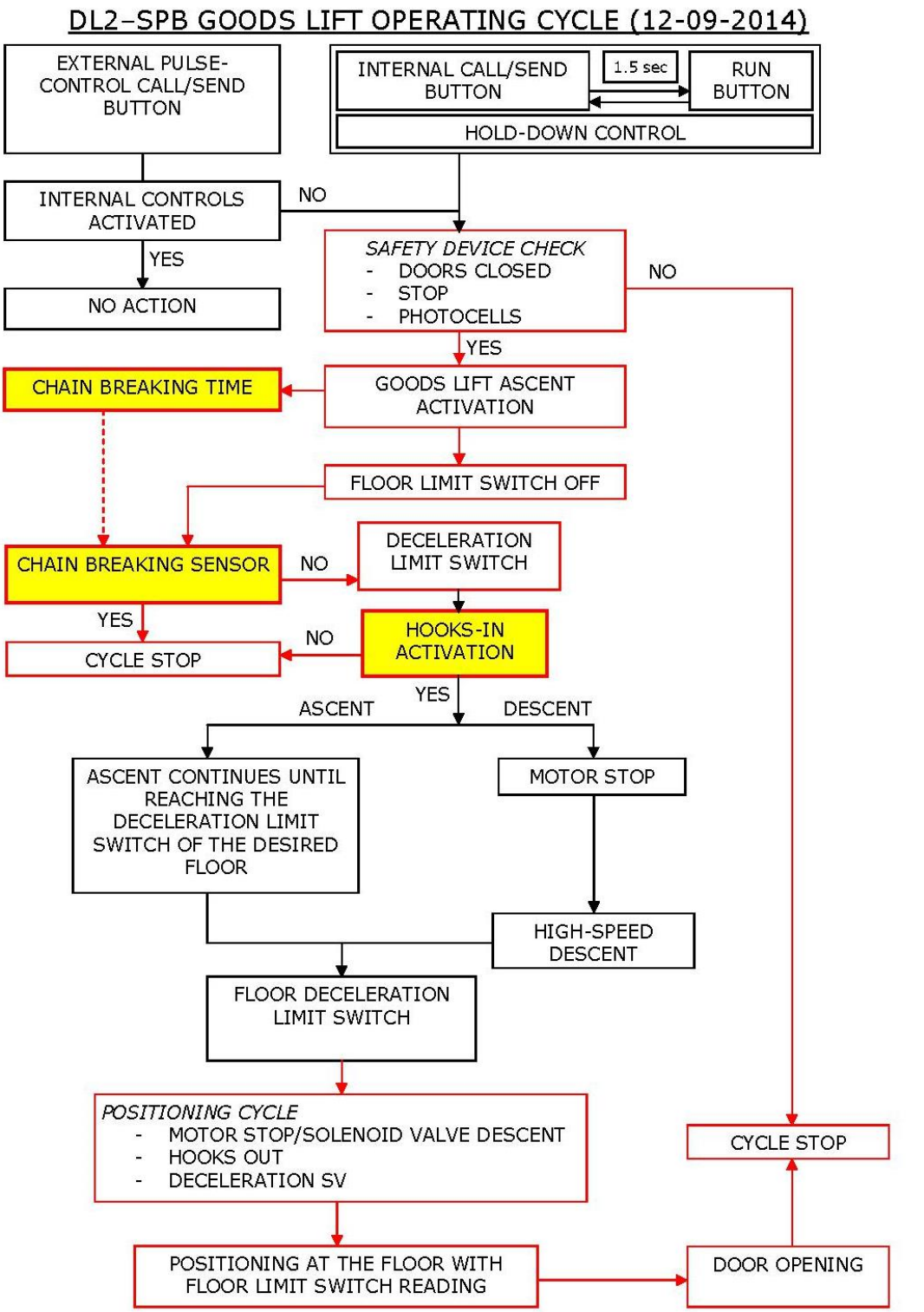

NOTES: When the "occupied time" of 30 seconds is enabled, the external controls are disabled as soon as the manoeuvre from the inside has ended.

= AUTOMATIC MANOEUVRE

= AUTOMATIC MANOEUVRE ONLY FROM THE OUTSIDE

= SAFETY DEVICE CHECKS

Per informazioni:
www.updinamic.com
E-mail: info@updinamic.com
Tel. + 39.0442.590.129
Fax +39.0442.599.091
Via Franco Modigliani, 22
37045 - Legnago (VR) Italy

SAFETY HOOKS UNIT + POSITION SENSOR

The hook / sensor group is installed in the mobile part and is the one shown in the photo.

During normal operation (ascent) the hooks "fall" downwards by gravity thus allowing the machine to operate without interference: when, on the other hand, it is necessary to insert the hooks during the slowdown phase up to the stop limit switch they will be "pulled" into position by the electromagnet and the hook will then move to the position shown in the photo.

The system checks that the hooks are perfectly open by means of the inductive control sensor which will turn on when the hook is resting on the adjustment screw for the open hooks signal (pay particular attention to this adjustment during assembly as the hook should not never hit the sensor directly): this signal is very important as it verifies the actual movement of the hooks during the phase in which they move by gravity: if the system does not receive the signal correctly, it stops.

NOTE:

The machine in the descent phase (P2-> P1) works with the sensor on until it reaches the slowdown limit switch of P1. Once this sensor has been reached, it activates the safety hooks and the system checks that the signal from the inductive sensor disappears: in this phase the machine continues its normal descent "waiting" for the correct reading of the inductive sensor and is not blocked to avoid hopping of the platform: if everything happens correctly within 1.5 seconds, the drive continues at low speed with the hooks inserted to reach the support but if this control time has elapsed, the system is not in the foreseen conditions and stops completely without reaching the stop limit switch.

Per informazioni:
www.updinamic.com
E-mail: info@updinamic.com
Tel. + 39.0442.590.129
Fax +39.0442.599.091
Via Franco Modigliani, 22
37045 - Legnago (VR) Italy

SAFETY HOOKS UNIT WITH INTEGRATED SENSOR

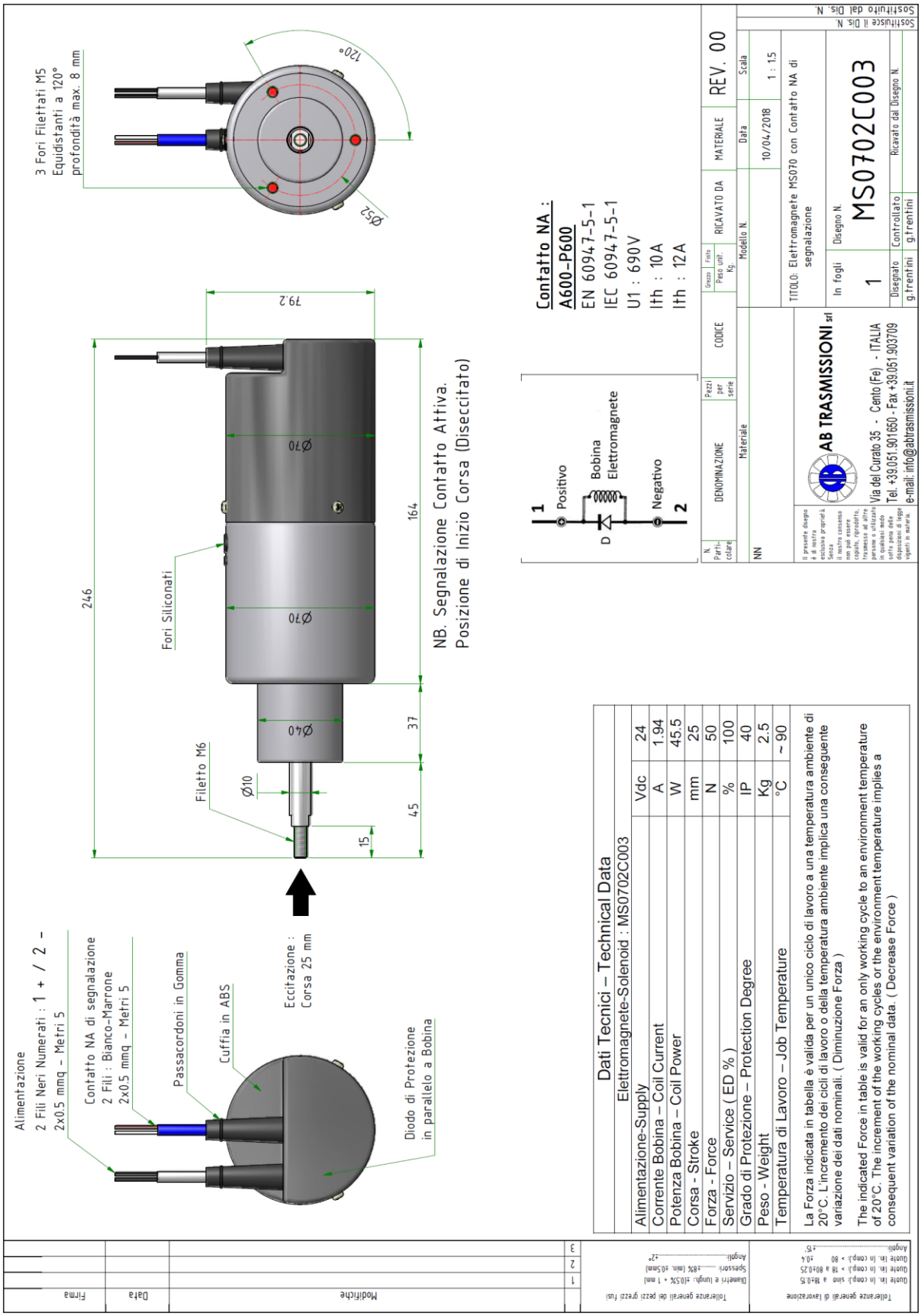

Per informazioni:
www.updinamic.com
E-mail: info@updinamic.com
Tel. + 39.0442.590.129
Fax +39.0442.599.091
Via Franco Modigliani, 22
37045 - Legnago (VR) Italy

SAFETY STRUT

For safety reasons, it is essential to install the strut if working underneath the lift during installation and maintenance.

It is strictly prohibited for unauthorised persons to stand underneath the lift and for reasons other than those mentioned above.

Operate as follows to install the strut:

- Anchor the base plate to the pit floor
- Screw one end of the side plates onto the base plate
- Screw the tube onto the side plates
- Provisionally anchor the angle bar to the pit floor (respect coupling with the tube)
- Screw the limit switch onto the angle bar
- Check that the tube is correctly in contact with the limit switch
- Finally fasten the limit switch
- Connect the limit switch to the electric panel (see the electric system manual)

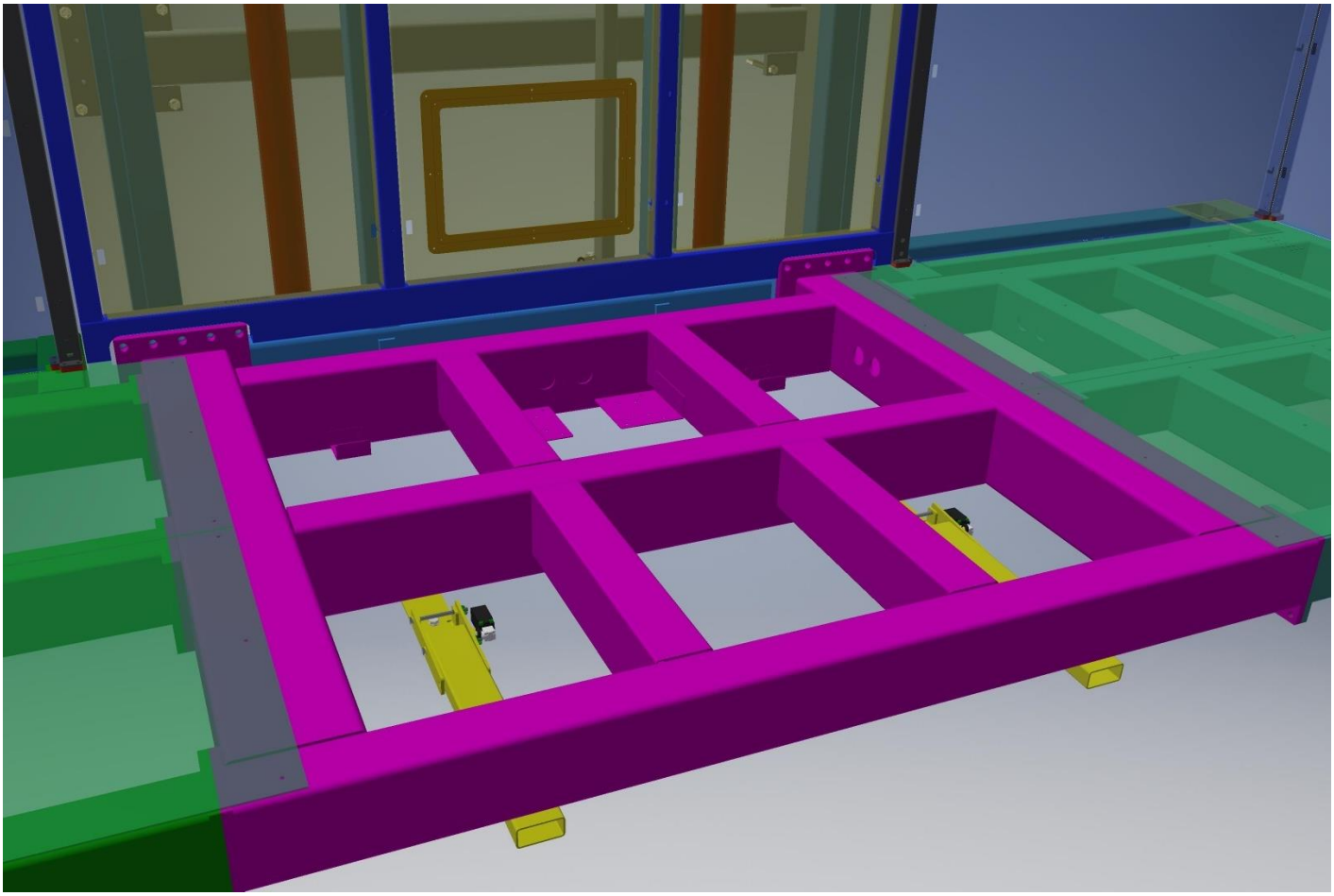

Per informazioni:
www.updinamic.com
E-mail: info@updinamic.com
Tel. + 39.0442.590.129
Fax +39.0442.599.091
Via Franco Modigliani, 22
37045 - Legnago (VR) Italy

In the rest phase, fasten the tube to the angle bar

During operation position the tube vertically by screwing the other end of the side plates onto the base plate. Check that the position is correct in order to ensure that the platform is supported.

The strut guarantees a maximum capacity of 2000 kg
Any maintenance operation must be carried out with the lift empty

Per informazioni:
www.updinamic.com
E-mail: info@updinamic.com
Tel. + 39.0442.590.129
Fax +39.0442.599.091
Via Franco Modigliani, 22
37045 - Legnago (VR) Italy

EMERGENCY STOP BUTTON IN THE PIT

An emergency stop button is provided in the pit to be activated during maintenance to disable any movement command given from the outside

It is strictly prohibited for unauthorised persons to stand underneath the goods lift and for reasons other than those mentioned above.

Via Franco Modigliani 22 37045 Legnago (Vr) – IT info@updinamic.com Tel +39.0442.59.01.29 Fax +39.0442.59.90.91 **www.updinamic.com**

Per informazioni:
www.updinamic.com
E-mail: info@updinamic.com
Tel. + 39.0442.590.129
Fax +39.0442.599.091
Via Franco Modigliani, 22
37045 - Legnago (VR) Italy

EXTERNAL COMMAND PUSHBUTTON PANEL

In the standard versions the systems are provided with two external pushbutton panels for control of the machine, which obviously will be installed for each floor P1 and P2, and which are included in the figure below.

Pushbutton panel

- The mushroom head emergency button: this button when pressed remains activated up to manual unlocking which is possible only using the special key. This solution enables, if requested by the user, locking operations in a relatively simple way of the machine, by pressing the button and extracting the key
- Luminous three-way selector: using this device the machine operation can be commanded (following release of the emergency key mushroom-head button) in the direction indicated by the arrows signalled on the panel (ascent/descent). The command is usually of the pulse type and thus on pressure of the selector the machine ascends or descends completely automatically, carrying out all the necessary checks. In determined situations where specific safety requirements require it, this command can be of the “man present” type (check the details of the machine purchased)

The luminous warning light inside the selector body has various functions in signalling the correct operation of the machine or highlighting any faults.

- Light off = Machine stationary at the opposite floor
- Slow flashing warning light = machine present on the floor in safety (doors can be opened)
- Slow flashing light = machine in motion
- Rapid flashing light = Door open or emergency

Per informazioni:
www.updinamic.com
E-mail: info@updinamic.com
Tel. + 39.0442.590.129
Fax +39.0442.599.091
Via Franco Modigliani, 22
37045 - Legnago (VR) Italy

ELECTRIC LOCKS

Normally the systems supplied by Updinamic are provided with one or more safety electric locks such as the one indicated in the phot below

These devices have a double function: electric locking with a plug block and plug sensor correctly inserted.

These devices are supplied on the machines when an door interlock is necessary for already-existing doors or where it is not possible to intervene in another way (for example for machines on plinths, to lock the gates)

In practice the lock body is positioned on a fixed part (wall, column etc.) and the plug on the mobile part is positioned solidly and sturdily so that the door or other mechanical device able to close the entrances, once closed (safety position), pushes the safety plug internally of the lock body in one of the points B; the device magnet will keep the plug blocked internally of the lock body in a case where there is no power supply and its activation is controlled by the machine management software which will power it only and exclusively when the safety condition permit this.
The device can be closed where there is no power supply, i.e. the plug can insert in the lock body (thus the gate can be closed when it had remained open) even where there is no power supply, but obviously it cannot be extracted until the power to the device has been re-established.

The electrical contact integrated in the device senses the effective presence (forced mechanical contact) of the plug in the safety position.

Per informazioni:
www.updinamic.com
E-mail: info@updinamic.com
Tel. + 39.0442.590.129
Fax +39.0442.599.091
Via Franco Modigliani, 22
37045 - Legnago (VR) Italy

SOLVING FREQUENT PROBLEMS

MACHINE DOES NOT START

- Check that the power supply voltage is present and working properly
- Check that the emergency mushroom head buttons have not been activated
- Check that the doors at the floors are closed and that the electric locks give the correct KSZ signal
- Check that the thermal protection of the motor is inserted
- Check that the hydraulic motor counter is efficient
- Check for proper functioning of the hydraulic control unit motor (and rotation direction)
- Power supply operation check

DOORS ARE NOT UNLOCKED AT THE FLOOR

- Check that the machine has completed the cycle and that the stop limit switch is correctly pressed
- Check correct power supply to the electric locks (24Vdc)
- Power supply operation check

CYCLE NOT COMPLETE

- If the machine is blocked on the deceleration limit switch of P2 (upper), this means that the inductive sensor has not sensed the change of status into the hooked position: check the sensor
- If the machine is blocked between the deceleration limit switch of P1 (lower) and the stop limit switch of P1 (lower), this means that the inductive sensor has not sensed the change of status into the hooked position: check the sensor

TECHNICAL SERVICE

Contact the system maintenance company or our Sales and Technical Service Department for anything you may need.

TECHNICAL SERVICE
UPDINAMIC S.r.l.
Via Modigliani, 22
37045 Legnago (VR)
Tel. +39 0442 / 590129
Fax +39 0442 / 599091
info@updinamic.com

REPAIRS AND SPARE PARTS

Important

IMPORTANT: For any repairs, contact qualified and authorised persons.
Should you ask our Sales and Technical Service Department for technical information or spare parts, always specify the data indicated on the identification plate.

Per informazioni:
www.updinamic.com
E-mail: info@updinamic.com
Tel. + 39.0442.590.129
Fax +39.0442.599.091
Via Franco Modigliani, 22
37045 - Legnago (VR) Italy

Via Franco Modigliani 22 37045 Legnago (Vr) – IT info@updinamic.com Tel +39.0442.59.01.29 Fax +39.0442.59.90.91 **www.updinamic.com**